YAMAHA

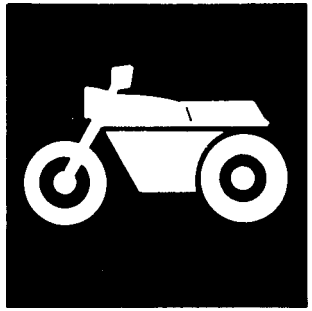

CATALOGO DE REPUESTOS

YZF–R1 (5PW1) ESPAÑA

2A5PW–352S1

YAMAHA GENUINE Parts & Accessories

A2

YZF–R1
CATALOGO DE REPUESTOS
©2001, Yamaha Motor Co., Ltd.
1ªedición, Diciembre 2001
Reservados todos los derechos.
Se prohíbe expresamente toda reimpresión
o utilización no autorizada de este manual
sin el consentimiento por escrito de
Yamaha Motor Co., Ltd.

A3

A4

PROLOGO

Este Catálogo de Respuetos corresponds a las piezas para el(los) modelo(s) del recuadro siguiente. Al formular el pedido de repuestos, se ruega citar este Catálogo de Repuestos y especificar correctamente los números de parte y los nombres de parte.

YZF–R1(5PW1)

1. Las modificaciones y agregados que se hayan realizado después de la edición de este Catálogo de Repuestos, serán anunciados en las Informaciones de Recambios Yamaha.
2. Abreviaciones
   En este. Catálogo de Repuestos se emplean las siguientes abreviaciones.
   - “UR” Usar el número de partes especificado
   - “UN” Usar la cantidad necesaria
   - “AP” Piezas sustitutivas
   - “LM” Fabricación local (Partes necesarias que se pedirán localmente)
   - “F#” No. de bastidor aplicable
3. Las piezas suministradas como conjunto se describen con un punto (.) que precede al nombre de la pieza como se indica a continuación.

   EJEMPLO

   CONJUNTO CARBURADOR
   .INYECTOR, piloto
   .BOQUILLA, principal
4. Cantidad de componentes de un conjunto
   La numeración que aparece a la derecha de cada descripción, indica la cantidad de piezas por cada unidad de conjunto.

   EJEMPLO

PIEZAS NO.	DESCRIPCION	CANT.	OBSERVACION
2F5–83310–60	ENSAMBLAJE DE LA LUZ	2	
115–83311–60	.BOMBILLA (6V–1 8W)	1	
1M1–83309–60	.REFLECTOR	1	

5. Los colores de los componentes se indican como sigue en la columna de“OBSERVACIONES”.

   EJEMPLO

PIEZAS NO.	DESCRIPCION	CANT.	OBSERVACION
2N4–24110–00–X5	.COMP. DEL TANQUE	2	MXR
3J1–24240–10	.GRAFICO, DEL TANQUE	1	para MXR

6. Números de Serie

   No. de Serie del motor.

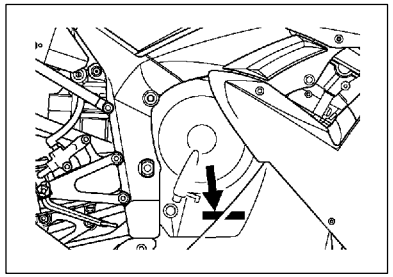

   No. de Serie del bastidor

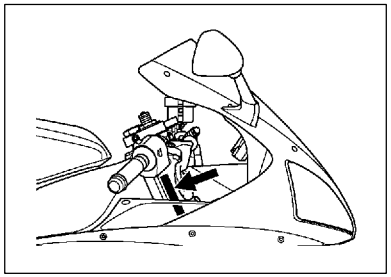

7. Debe tenerse en cuenta que las ilustraciones sirven como guia para la búsqueda de las referencias y no deben usarse para el montaje. Durante el montaje, se recomienda usar el manual de Taller correspondiente.
8. EL asterisco (*)antes del número de referencia indica los elementos modificados después de la primera edición.

ROTULO DE MODELO

(1) El rótulo llamada “Rótulo de Modelo” está en la ubicación indicada abajo en el (3). Cuando se utilice este catálogo de partes, se ruega cotejar entre el “código de modelo–número de código de producción” del catálogo y el” código de modelo–número de código de producción” indicado en el Rótulo de Modelo fijado en el producto correspondiente.

(2) Indicación del “Rótulo de Modelo”

a b ○ xxxx – xxx ● x c	a: Código de tipo de Modelo b: Número de código de Producción c: Tipo de color

○ 4TW1–010 ● A

(3) Ubicación de fijación del Rótulo de Modelo

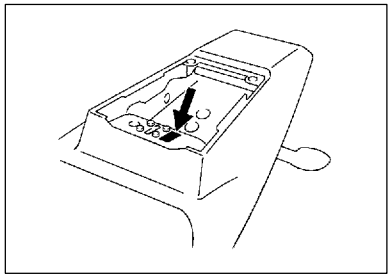

(4) Código de Modero–Número de código de Producción del Modelo Listado en este Catálogo de Partes

Código de Modelo	Número de Código de Producción	Pais(destine)	Código de Modelo	Número de Código de Producción	Pais(destine)
5PW1	060	SPAIN			
	061	SPAIN			

(5) Información de Color

Código de Modelo	Código de tipo de color	Código de color	Nombre de color	Abreviatura
5PW1	A	0121	VIVID RED COCKTAIL 1	VRC1
	B	0564	DEEP PURPLISH BLUE METALLIC C	DPBMC
	C	0791	SILVER 3	S3
	D	0564	DEEP PURPLISH BLUE METALLIC C (/ BLUISH WHITE COCKTAIL 1)	DPBMC

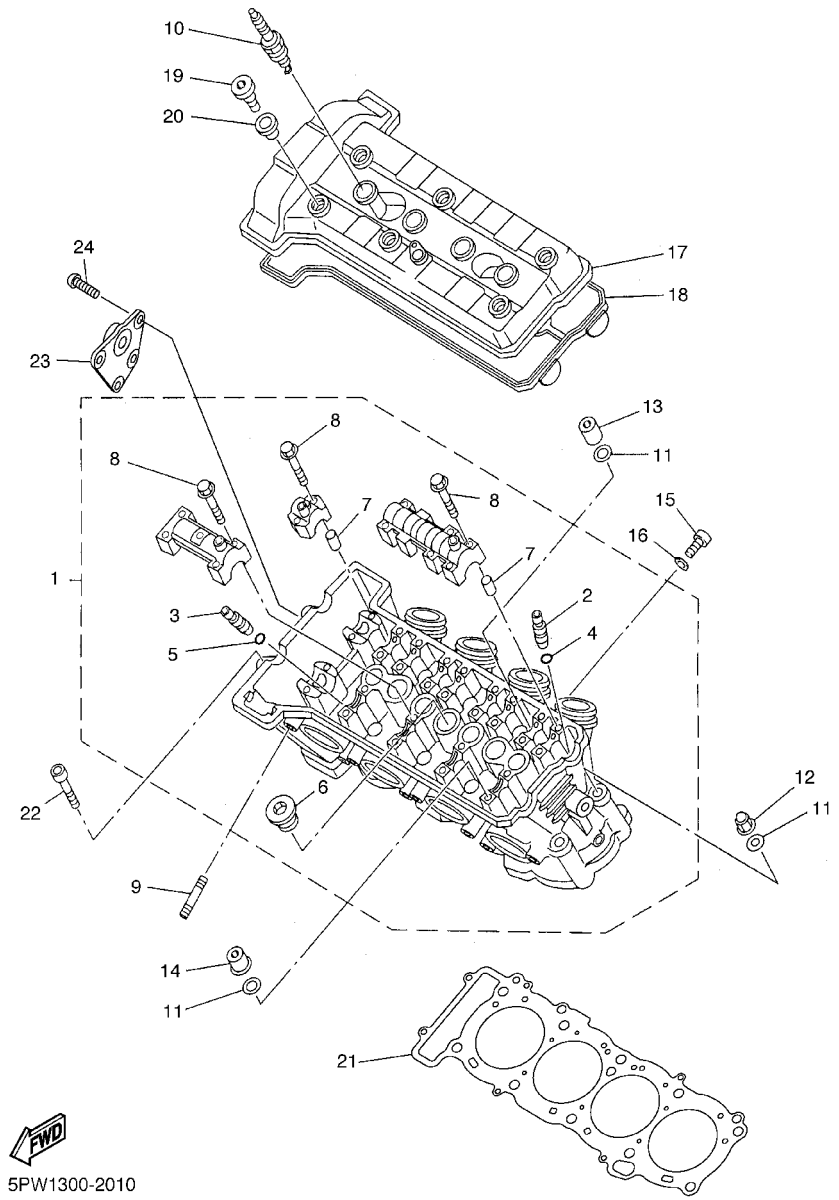

FIG. 1 CILINDRO

REF. NO.	CODIGO NO.	DESCRIPCION	5PW1					OBSERVACION
1	5PW–11101–00	CULATA DE CILINDRO COMPLETA	1					
2	3TJ–11133–10	.GUIA VALV.DE ADM.	10					
3	1WG–11133–11	.GUIA VALV.DE ADM.	8					
4	93440–07149	.BOLA	12					
5	93440–10153	.BOLA	8					
6	90340–27001	.TORNILLO, DE DRENAJE	1					
7	91808–16023	.PASADOR DE CLAVIJA	12					
8	90105–06026	.TORNILLO	28					
9	95617–08625	PERNO DE PUNTAL	8					
10	94701–00407	BUJIA (ND IU27D)	4					UR
	94701–00408	BUJIA (NGK IR CR9EIA 9)	4					UR
11	90201–10013	ARANDELA PLANA	10					
12	90176–10075	TUERCA CORONA	2					
13	90179–10006	TUERCA	3					
14	90179–10414	TUERCA	5					
15	95024–06012	PERNO, DE BRIDA	1					
16	90430–06014	JUNTA	1					
17	5PW–11191–00	TAPA CULATA DE CILINDRO 1	1					
18	5PW–11193–00	EMPAQUE	1					
19	90109–066F0	PERNO	6					
20	4KG–1111G–00	CASQUILLO DE GOMA	6					
21	5PW–11181–00	JUNTA, DE CULATA 1	1					
22	91317–06060	PERNO	2					
23	5PW–11119–00	SOPORTE DEL MOTOR	1					
24	90149–06020	TORNILLO DE REGLAJE	4					

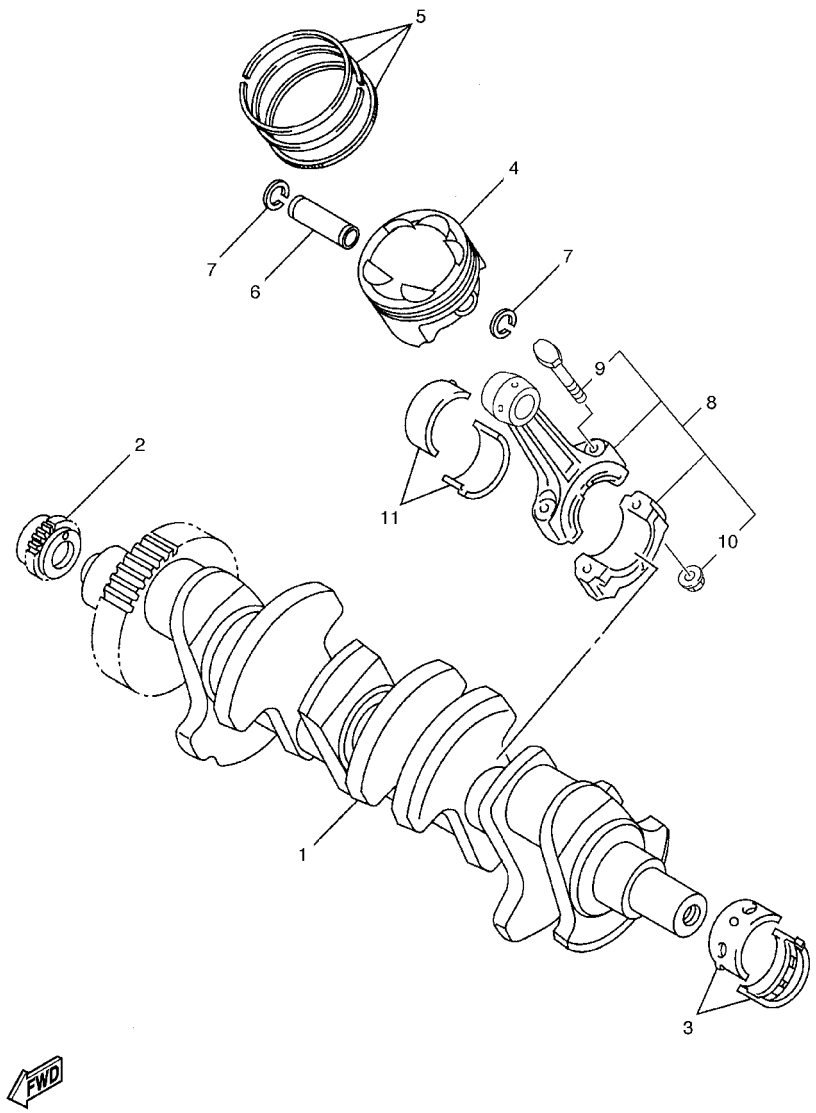

5PW1300-2020

FIG. 2 CIGUENAL. PISTON

REF. NO.	CODIGO NO.	DESCRIPCION	5PW1					OBSERVACION
1	4XV–11411–00	CIGUENAL	1					
2	4XV–11549–00	CATALINA CADENA DE LEVA	1					
3	3GM–11416–00	COJINETE PLANO 1	10					UR AZUL
	3GM–11416–10	COJINETE PLANO 1	10					UR NEGRO
	3GM–11416–20	COJINETE PLANO 1	10					UR CASTANO
	3GM–11416–A0	COJINETE PLANO 1	10					UR BLANCO
	3GM–11416–B0	COJINETE PLANO 1	10					UR PURPURA
4	4XV–11631–10	PISTON (STD)	4					
5	5LV–11603–00	JUEGO DE ANILLOS (STD)	4					
6	4XV–11633–00	PASADOR, PISTON	4					
7	90468–12069	PRESILLA	8					
8	5PW–11650–00	BIELA COMPLETA	4					
9	5JW–11654–00	.TORNILLO DE BIELA	2					
10	90179–08327	.TUERCA	2					
11	3GM–11656–00	COJINETE PLANO	8					UR AZUL
	3GM–11656–10	COJINETE PLANO	8					UR NEGRO
	3GM–11656–A0	COJINETE PLANO	8					UR BLANCO
	3GM–11656–B0	COJINETE PLANO	8					UR PURPURA

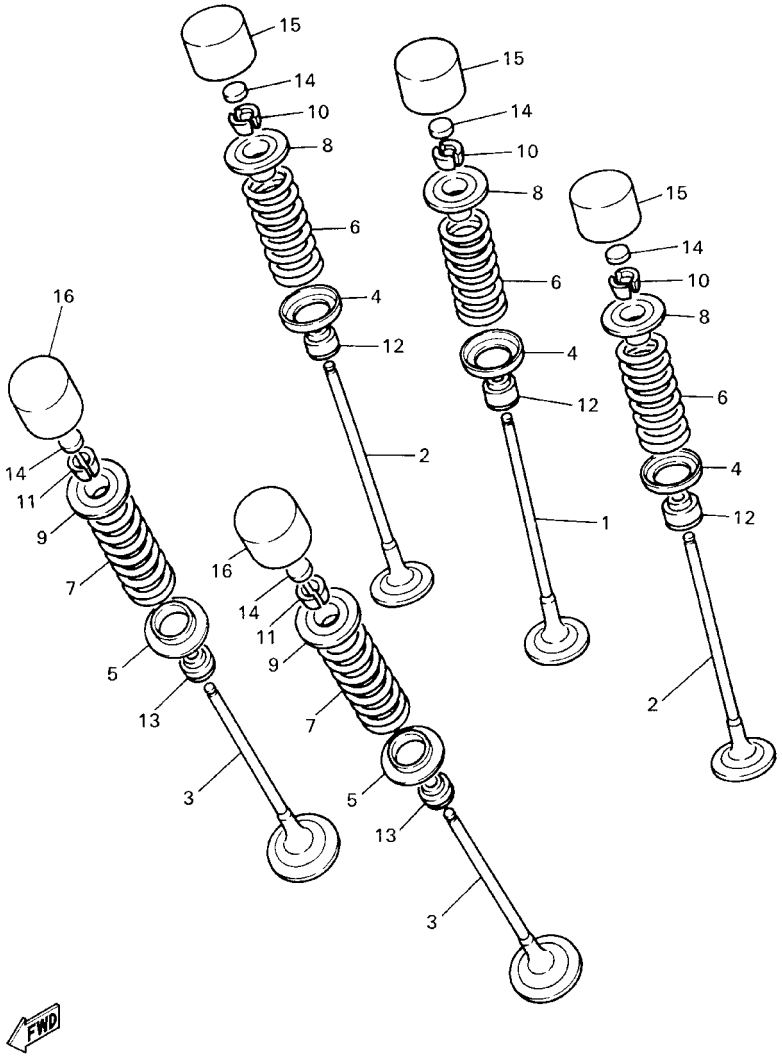

4XV352-8030

FIG. 3 VALVULA

REF. NO.	CODIGO NO.	DESCRIPCION	5PW1					OBSERVACION
1	4XV–12111–00	VALVULA DE ADMISION	4					
2	4XV–12112–00	VALVULA, DE ADMISION 2	8					
3	5LV–12121–00	VALVULA DE ESCAPE	8					
4	1HX–12116–01	ASIENTO RESORTE DE VALVULA	12					
5	3GM–12126–00	ASIENTO RESORTE DE VALVULA2	8					
6	4XV–12113–00	RESORTE VALVULA INTERNA	12					
7	4XV–12114–00	RESORTE VALVULA EXTERIOR	8					
8	1HX–12117–00	RETEN RESORTE DE VALVULA	12					
9	1WG–12117–00	RETEN RESORTE DE VALVULA	8					
10	1HX–12118–00	SEGURO DE VALVULA	24					
11	1WG–12118–00	SEGURO DE VALVULA	16					
12	4TV–12119–00	SELLO DE ACEITE VALVULA	12					
13	4SV–12119–00	SELLO DE ACEITE VALVULA	8					
14	1HX–12168–00	COJIN, AJUSTADOR 2 (1.20)	20					UR
	1HX–12168–20	COJIN, AJUSTADOR 2 (1.25)	20					UR
	1HX–12168–40	COJIN, AJUSTADOR 2 (1.30)	20					UR
	1HX–12168–60	COJIN, AJUSTADOR 2 (1.35)	20					UR
	1HX–12168–80	COJIN, AJUSTADOR 2 (1.40)	20					UR
	1HX–12168–A0	COJIN, AJUSTADOR 2 (1.45)	20					UR
	1HX–12168–F0	COJIN, AJUSTADOR 2 (1.50)	20					UR
	1HX–12168–H1	COJIN, AJUSTADOR 2 (1.55)	20					UR
	1HX–12168–K1	COJIN, AJUSTADOR 2 (1.60)	20					UR
	1HX–12168–M1	COJIN, AJUSTADOR 2 (1.65)	20					UR
	1HX–12168–R1	COJIN, AJUSTADOR 2 (1.70)	20					UR
	1HX–12168–U1	COJIN, AJUSTADOR 2 (1.75)	20					UR
	1HX–12168–W1	COJIN, AJUSTADOR 2 (1.80)	20					UR
	1HX–12168–Y1	COJIN, AJUSTADOR 2 (1.85)	20					UR

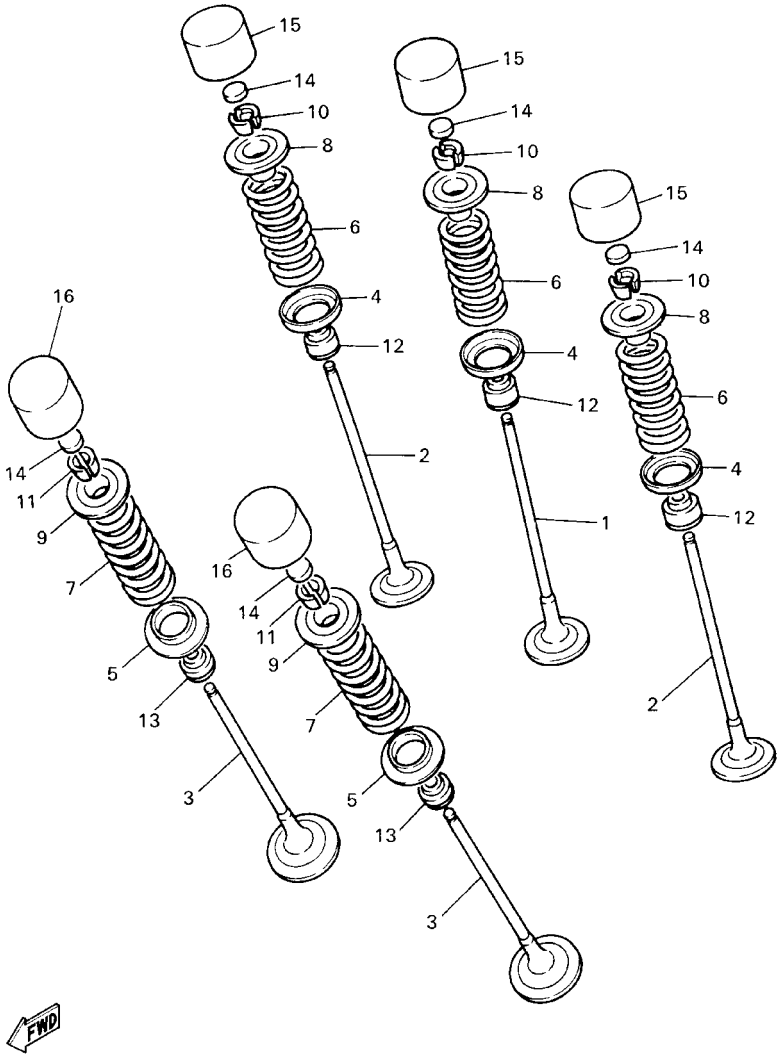

4XV352-8030

FIG. 3 VALVULA

REF. NO.	CODIGO NO.	DESCRIPCION	5PW1					OBSERVACION
14	1HX–12169–11	COJIN, AJUSTADOR 2 (1.90)	20					UR
	1HX–12169–31	COJIN, AJUSTADOR 2 (1.95)	20					UR
	1HX–12169–50	COJIN, AJUSTADOR 2 (2.00)	20					UR
	1HX–12169–70	COJIN, AJUSTADOR 2 (2.05)	20					UR
	1HX–12169–90	COJIN, AJUSTADOR 2 (2.10)	20					UR
	1HX–12169–E0	COJIN, JUSTADOR 2 (2.15)	20					UR
	1HX–12169–G0	COJIN, AJUSTADOR 2 (2.20)	20					UR
	1HX–12169–J0	COJIN, AJUSTADOR 2 (2.25)	20					UR
	1HX–12169–L0	COJIN, AJUSTADOR 2 (2.30)	20					UR
	1HX–12169–N0	COJIN, AJUSTADOR 2 (2.35)	20					UR
	1HX–12169–T0	COJIN, AJUSTADOR 2 (2.40)	20					UR
15	3LN–12153–20	LEVANTADOR DE VALVULA	12					UR BLUE
	3LN–12153–09	LEVANTADOR DE VALVULA (O/S)	12					UR GREEN
16	3FV–12153–20	LEVANTADOR DE VALVULA	8					UR BLUE
	3FV–12153–30	LEVANTADOR DE VALVULA	8					UR ROJO
	3FV–12153–09	LEVANTADOR DE VALVULA (O/S)	8					UR GREEN

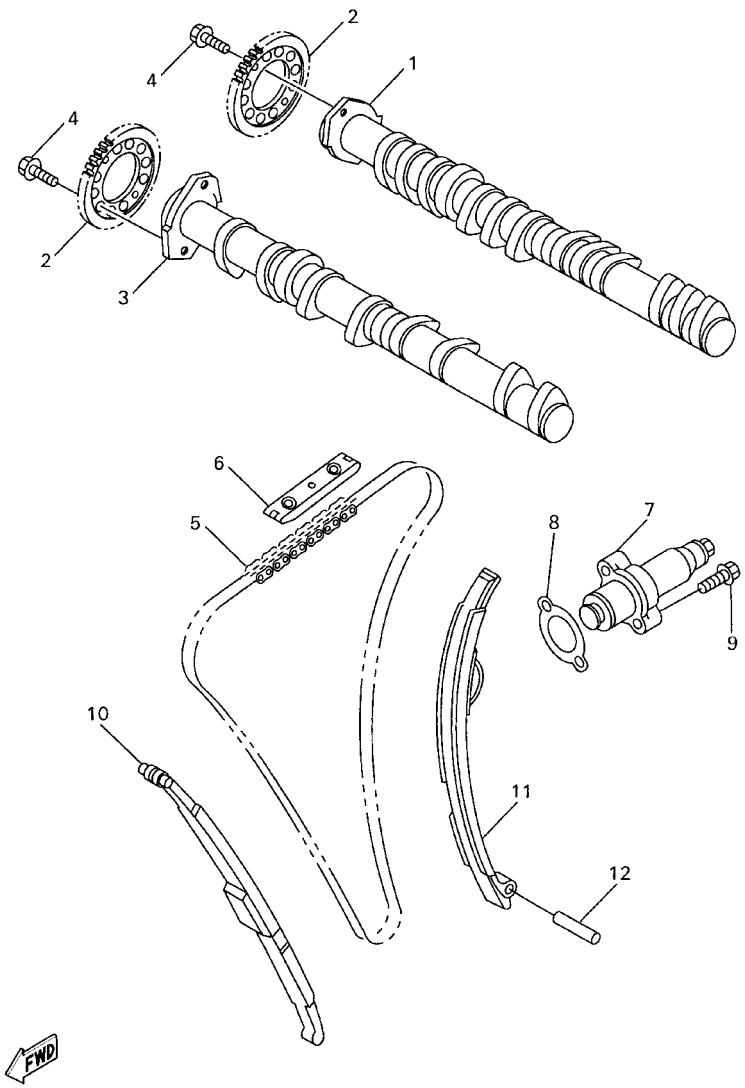

4XV352-8040

FIG. 4 ARBOL DE LEV. CADENA

REF. NO.	CODIGO NO.	DESCRIPCION	5PW1					OBSERVACION
1	5JJ–12171–00	ARBOL DE LEVAS 1	1					
2	4XV–12176–00	CATALINA DE CADENA	2					
3	5PW–12181–00	ARBOL DE LEVAS 2	1					
4	90105–07342	TORNILLO	4					
5	94591–49130	CADENA	1					
6	5BE–12241–00	TOPE DE GUIA 2	1					
7	5PW–12210–00	TENSOR CADENA DE LEVA	1					
8	4FM–12213–00	EMPAQUE DE CAJA TENSOR	1					
9	95027–06025	PERNO, DE BRIDA	2					
10	4XV–12251–00	AMORTIGUADOR CADENA 1	1					
11	5PW–12252–00	AMORTIGUADOR CADENA 2	1					
12	93607–44190	PASADOR DE CLAVIJA	1					

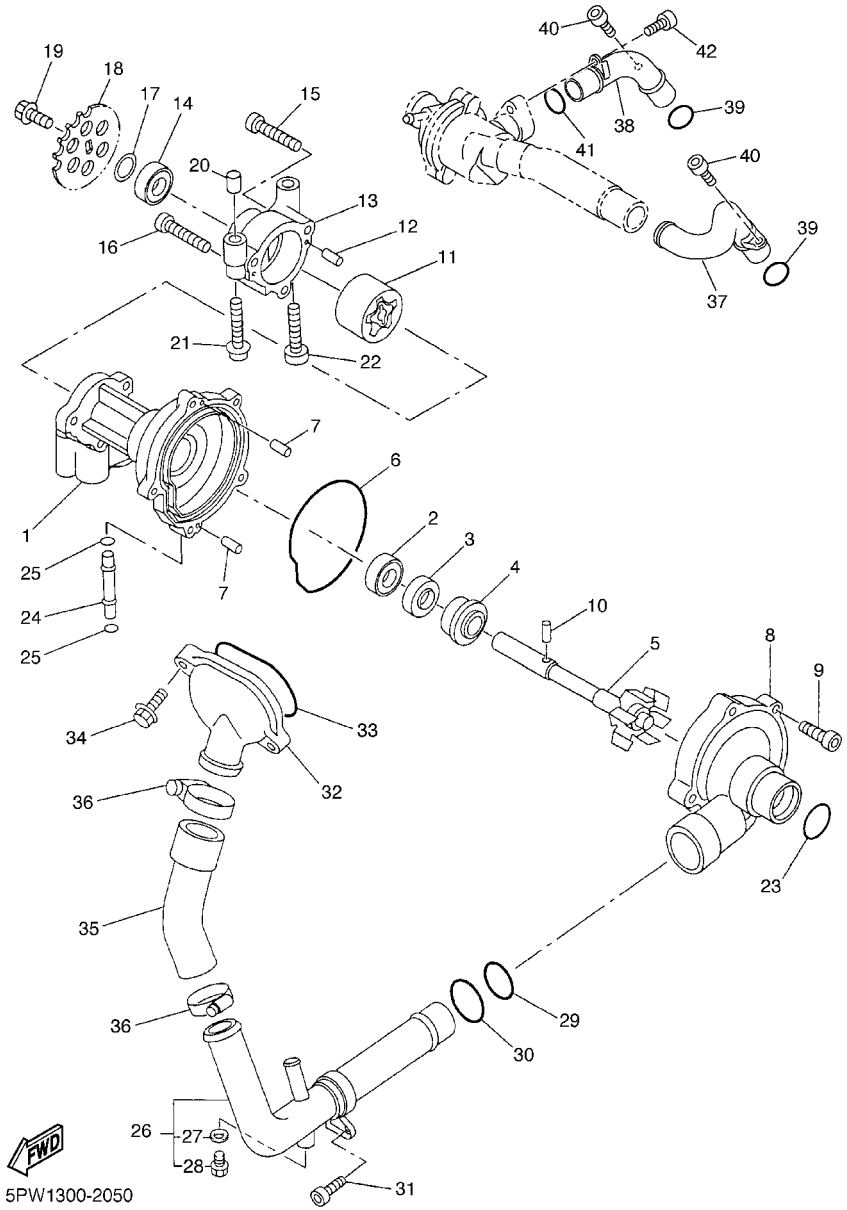

FIG. 5 BOMBA DE AGUA

REF. NO.	CODIGO NO.	DESCRIPCION	5PW1					OBSERVACION
1	4XV–12421–00	CAJA DE BOMBA DE AGUA	1					
2	93306–00106	COJINETE	1					
3	93102–12372	SELLO ACEITE	1					
4	11H–12438–10	SELLO MECANICO	1					
5	4XV–12450–00	EJE IMPULSOR COMPLETO	1					
6	4XV–12439–00	ANILLO O	1					
7	93604–10011	PASADOR DE CLAVIJA	2					
8	4XV–12422–00	CUBIERTA DE CAJA	1					
9	91317–06025	PERNO	5					
10	93603–17070	PASADOR DE CLAVIJA	1					
11	4XV–13310–00	ROTOR COMPLETO 1	1					
12	93603–12007	PASADOR DE CLAVIJA	2					
13	4XV–13336–00	CAJA DE ROTOR	1					
14	93306–00106	COJINETE	1					
15	91317–06035	PERNO	2					
16	91317–06040	PERNO	1					
17	90201–12541	ARANDELA PLANA	1					
18	4XV–13355–00	CATALINA IMPULSADA	1					
19	90105–06154	TORNILLO	1					
20	91808–30031	PASADOR DE CLAVIJA	1					
21	90110–06026	TORNILLO ALLEN	1					
22	90110–06063	TORNILLO ALLEN	1					
23	93210–357A2	ANILLO O	1					
24	4XV–12485–00	TUBO 5	1					
25	93210–06667	ANILLO O	2					
26	5PW–12481–00	TUBO 1	1					
27	90430–06014	.JUNTA	1					

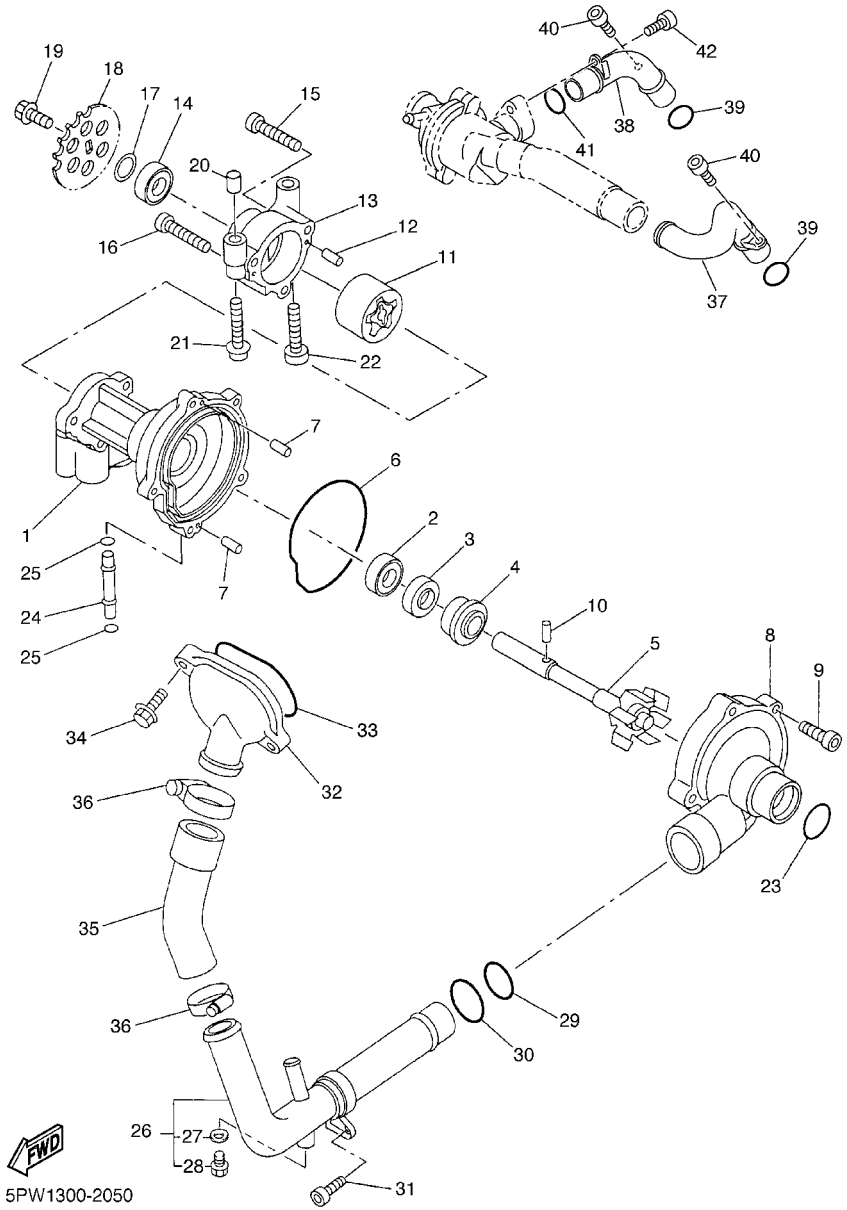

FIG. 5 BOMBA DE AGUA

REF. NO.	CODIGO NO.	DESCRIPCION	5PW1					OBSERVACION
28	90153–06029	.TORNILLO HEXAGONAL	1					
29	93210–235A1	ANILLO O	1					
30	93210–27370	ANILLO O	1					
31	90110–06018	TORNILLO ALLEN	1					
32	5JJ–12469–00	CONDUCTO	1					
33	93210–47675	ANILLO O	1					
34	95027–06020	PERNO, DE BRIDA	2					
35	5JJ–12576–00	MANGUERA 1	1					
36	90450–38040	BRIDA, MANGUERA	2					
37	5PW–12482–00	TUBO 2	1					
38	5PW–12483–00	TUBO 3	1					
39	93210–18417	ANILLO O	2					
40	91317–06016	PERNO	2					
41	93210–18417	ANILLO O	1					
42	91317–06012	PERNO	1					

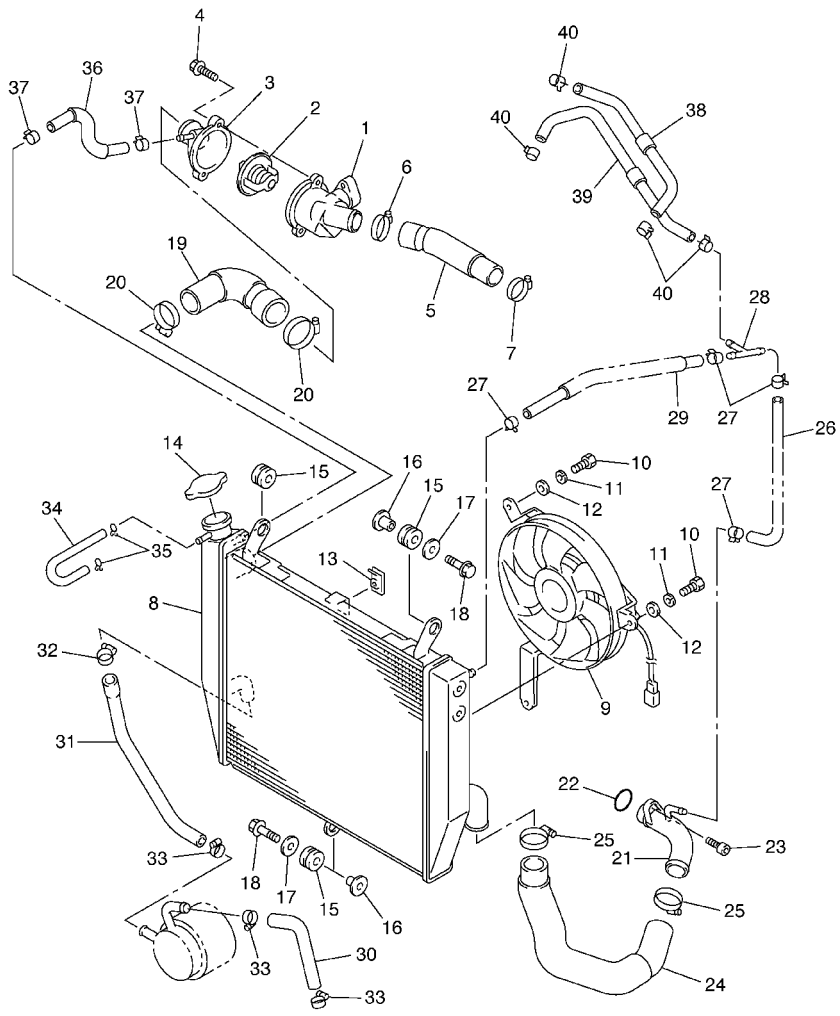

5PW1300-2060

FIG. 6 RADIADOR. MANGUELA

REF. NO.	CODIGO NO.	DESCRIPCION	5PW1					OBSERVACION
1	5PW–12417–00	ENCAJE DE TERMOSTATO	1					
2	4FM–12410–00	TERMOSTATO CONJUNTO	1					
3	5PW–12413–00	CUBIERTA TERMOSTATO	1					
4	95027–06025	PERNO, DE BRIDA	2					
5	5PW–12577–00	MANGUERA 2	1					
6	90450–32015	BRIDA, MANGUERA	1					
7	90450–28014	BRIDA, MANGUERA	1					
8	5PW–12461–00	RADIADOR COMPLETO	1					
9	5PW–12405–00	COMPRESOR	1					
10	97307–06012	PERNO	3					
11	92907–06100	ARANDELA	3					
12	92907–06600	ARANDELA	3					
13	1AA–12535–00	EMPAQUETADURA	2					
14	22W–12462–00	TAPON, DEL RADIADOR	1					
15	90480–15363	TAPON	3					
16	90387–07391	COLLAR	2					
17	90201–06071	ARANDELA PLANA	2					
18	95827–06025	TUERCA DE REBORDE	2					
19	5PW–12579–00	MANGUERA 4	1					
20	90450–38040	BRIDA, MANGUERA	2					
21	5PW–12484–00	TUBO 4	1					
22	93210–23787	ANILLO O	1					
23	90110–06018	TORNILLO ALLEN	1					
24	5PW–12551–00	55 PLACA	1					
25	90450–38040	BRIDA, MANGUERA	2					
26	5PW–1243A–00	TUBO 1	1					
27	90467–11090	PRESILLA	4					

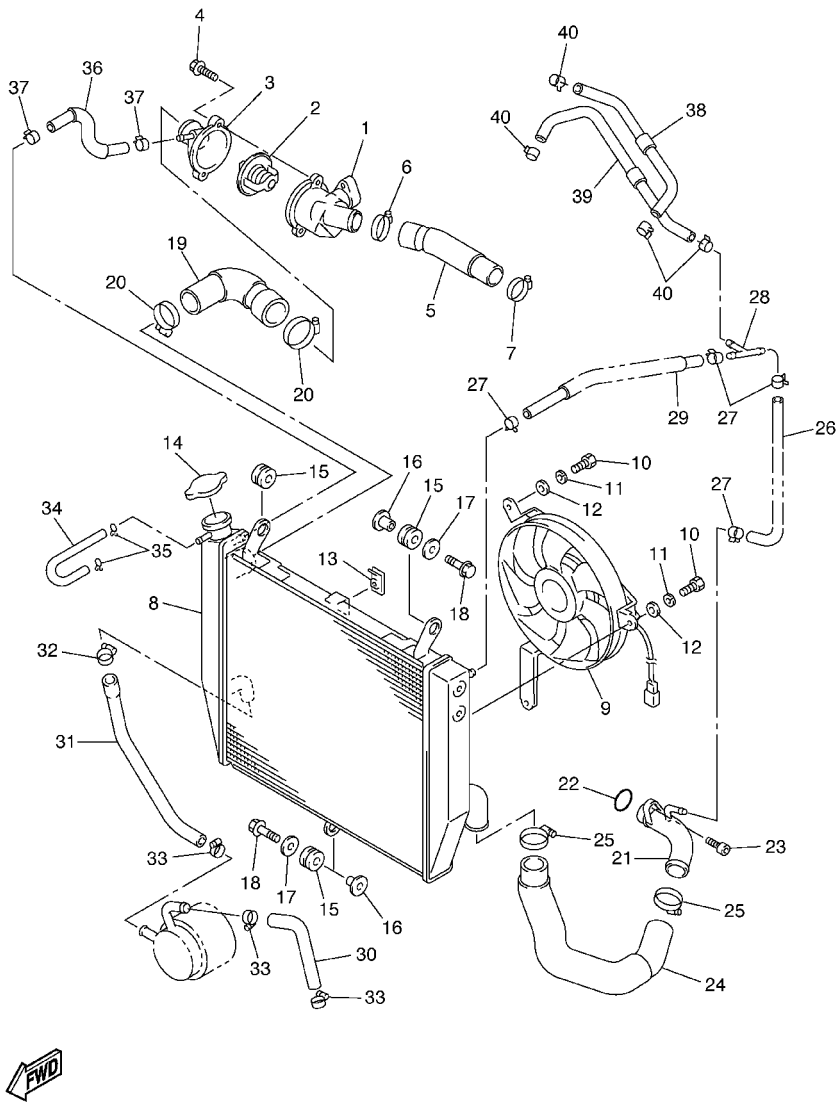

5PW1300-2060

FIG. 6 RADIADOR. MANGUELA

REF. NO.	CODIGO NO.	DESCRIPCION	5PW1					OBSERVACION
28	90413–07023	UNION	1					
29	5PW–1244G–00	MANGUERA4	1					
30	5PW–12588–00	MANGUERA 5	1					
31	5PW–12589–00	MANGUERA 6	1					
32	90450–22017	BRIDA, MANGUERA	1					
33	90450–19001	BRIDA, MANGUERA	3					
34	90445–094K7	TUBO (L180)	1					
35	90467–08003	PRESILLA	2					
36	5PW–12552–00	MANGUERA 8	1					
37	90467–11090	PRESILLA	2					
38	5PW–1243E–00	TUBO 2	1					
39	5PW–1243F–00	MANGUERA 3	1					
40	90467–11090	PRESILLA	4					

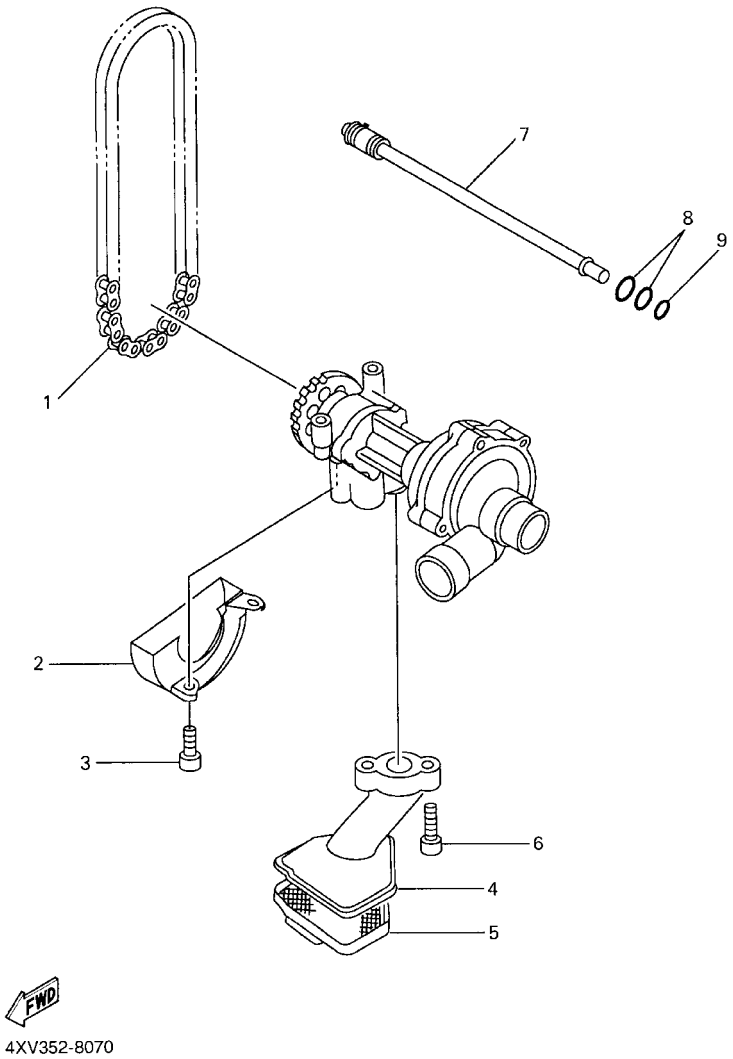

FIG. 7 BOMBA DE ACEITE

REF. NO.	CODIGO NO.	DESCRIPCION	5PW1					OBSERVACION
1	94580–25078	CADENA (DID25 78LE)	1					
2	5PW–13327–00	CUBIERTA ENGRANAJE DE BOMBA	1					
3	90110–06018	TORNILLO ALLEN	1					
4	5PW–13412–00	CAJA DE FILTRO	1					
5	4XV–13411–00	FILTRO DE ACEITE	1					
6	90110–06047	TORNILLO ALLEN	2					
7	5JJ–1316E–00	TUBO, DE ENTREGA 5	1					
8	93210–09165	ANILLO O	2					
9	93210–06667	ANILLO O	1					

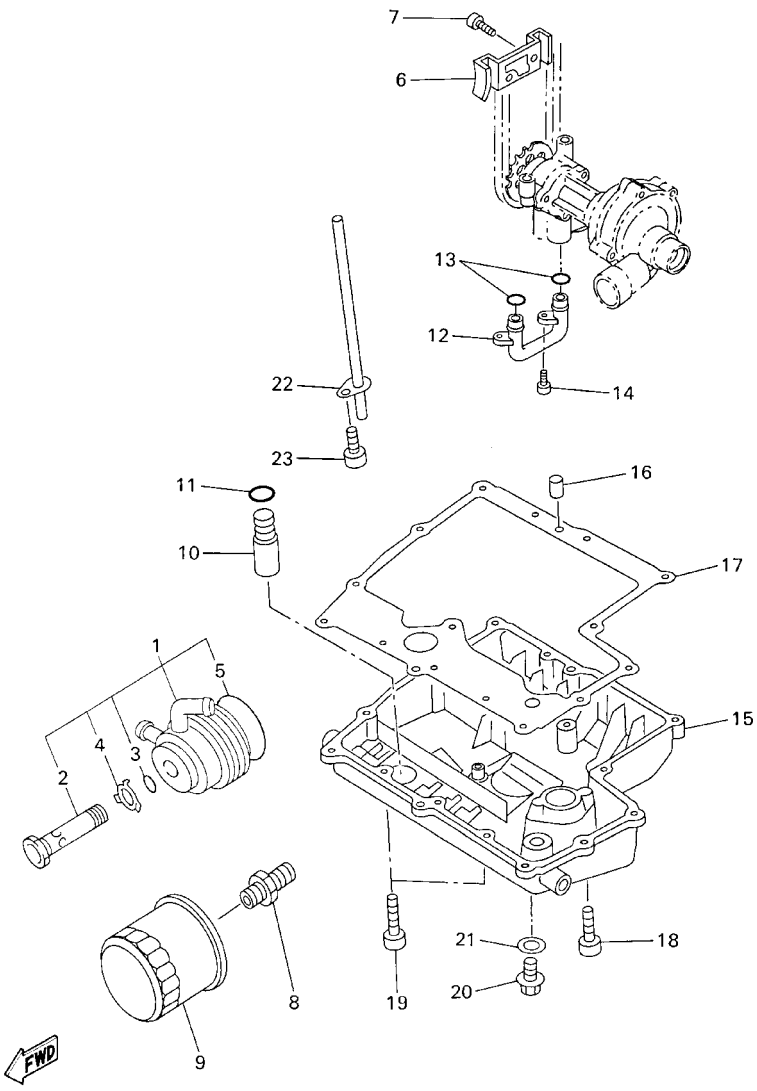

4XV352-8081

FIG. 8 FILTRO ACEITE

REF. NO.	CODIGO NO.	DESCRIPCION	5PW1					OBSERVACION
1	5PW–13470–00	ENFRIADOR DE ACEITE COMPLETO	1					
2	5PW–12822–00	.PERNO DE UNION	1					
3	5PW–13473–00	.ANILLO O	1					
4	5PW–13318–00	.ARANDELA	1					
5	5PW–13475–00	.EMPAQUE	1					
6	4XV–13898–00	SOSTEN	1					
7	91317–06012	PERNO	2					
8	90401–20145	PERNO DE UNION	1					
9	5GH–13440–00	ELEMENTO FILTRO DE ACEITE	1					
10	5PW–13490–00	VALVELA DE DESCOMPRESION	1					
11	93210–15566	ANILLO O	1					
12	4XV–13416–00	TUBO DE ACEITE 1	1					
13	93210–14003	ANILLO O	2					
14	91317–06012	PERNO	2					
15	5PW–13417–00	TAPA DE FILTRO	1					
16	99530–08012	PASADOR, DE ESPIGA	2					
17	5LV–13414–00	EMPAQUE DE TAPA FILTRO	1					
18	91317–06025	PERNO	13					
19	90110–06225	TORNILLO ALLEN	2					
20	90340–14132	TORNILLO, DE DRENAJE	1					
21	214–11198–01	EMPAQUE	1					
22	5PW–13161–00	TUBO CONDUCTOR 1	1					
23	90110–06018	TORNILLO ALLEN	1					

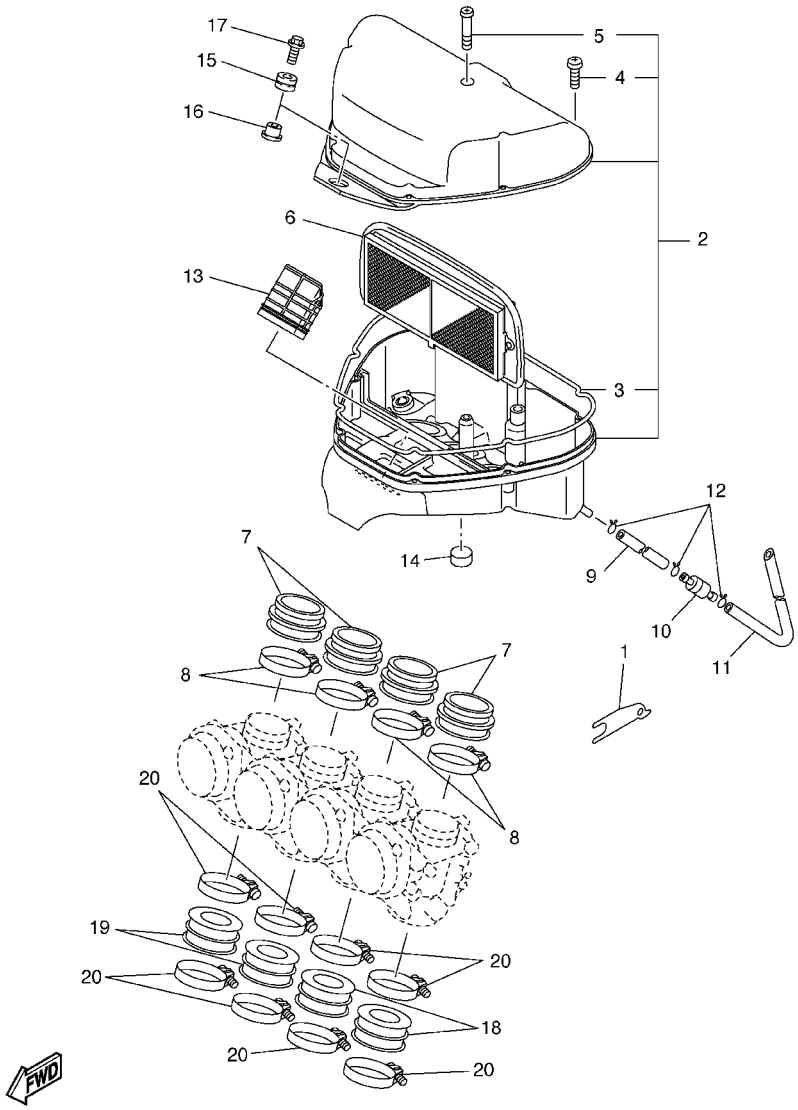

5PW1300-2090

FIG. 9 ADMISION

REF. NO.	CODIGO NO.	DESCRIPCION	5PW1					OBSERVACION
1	5JJ–14414–00	SOPORTE 2	1					
2	5PW–14401–00	CAJA DE FILTRO DE AIRE COMPL.	1					
3	4XV–14452–00	.SELLO	1					
4	98507–05025	.TORNILLO DE CABEZA CON PLANA	7					
5	98507–05045	.TORNILLO DE CABEZA CON PLANA	1					
6	5PW–14451–00	ELEMENTO DEL FILTRO DEL AIRE	1					
7	5PW–14453–00	UNION DEL FILTRO DEL AIRE 1	4					
8	90450–53002	BRIDA, MANGUERA	4					
9	90445–11M52	TUBO (L150)	1					
10	4X7–2149Y–00	FILTRO COMPLETO	1					
11	90445–11013	TUBO (L410)	1					
12	90467–10041	PRESILLA	3					
13	5PW–14437–00	CONDUCTO	1					
14	4XV–28371–00	AMORTIGUADOR	1					
15	90480–12314	TAPON	1					
16	90387–065J6	COLLAR	1					
17	95817–06020	TUERCA DE REBORDE	1					
18	5PW–13597–00	JUNTA, DE CARBURADOR 3	2					
19	5PW–13598–00	COJINETE DE RODILLOS	2					
20	90450–63001	BRIDA, MANGUERA	8					

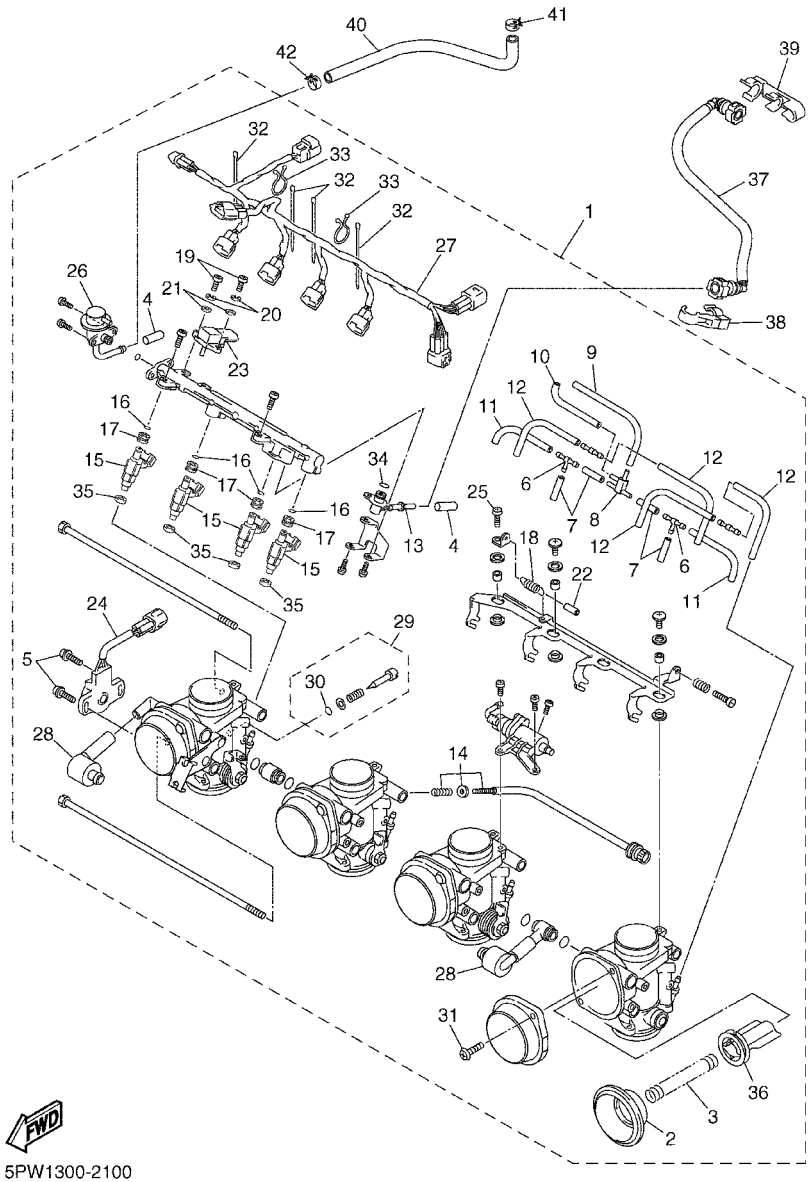

5PW1300-2100

FIG. 10 ADMISION 2

REF. NO.	CODIGO NO.	DESCRIPCION	5PW1					OBSERVACION
1	5PW–13750–00	CAJA DE ACELERADOR COMPL.	1					
2	5PW–24411–00	.DIAFRAGMA	4					
3	4KM–14933–00	.RESORTE DE DIAFRAGMA	4					
4	5JW–14118–00	.TAPA	2					
5	8CC–14216–10	.TORNILLO	2					
6	68V–24376–00	.TUBO DE UNION 1	2					
7	5FL–14348–10	.MANGUERA	4					
8	5PW–1410F–00	.CONECTOR	1					
9	5PW–14348–00	.MANGUERA	1					
10	5PW–14349–00	.TUBO	1					
11	5FL–14348–00	.MANGUERA	2					
12	5PW–14396–00	.TUBO	4					
13	5JW–12881–00	.TAPA INJECTO DE COMBUSTIBLE	1					
14	5PW–14103–00	.CJTO. TORNILLO DEL RALENTI	1					
15	5PW–13761–00	.INYECTOR	4					
16	5FL–14147–00	.ANILLO O	4					
17	5FL–13766–00	.ANILLO PROTECTOR	4					
18	5JW–14589–00	.RESORTE	1					
19	98506–05016	.TORNILLO DE CABEZA CON PLANA	2					
20	92906–05100	.ARANDELA	2					
21	92906–05600	.ARANDELA	2					
22	5DM–14936–00	.ASIENTO DE RESORTE	1					
23	5JW–82380–00	.SENSOR DE PRESION	1					
24	5PW–85885–00	.TERMICA SENSORIO	1					
25	98502–04010	.TORNILLO DE CABEZA CON PLANA	1					
26	5PW–13906–00	.REGULADOR	1					
27	5PW–82386–00	.EXTENSION, ARNES DE CABLES	1					

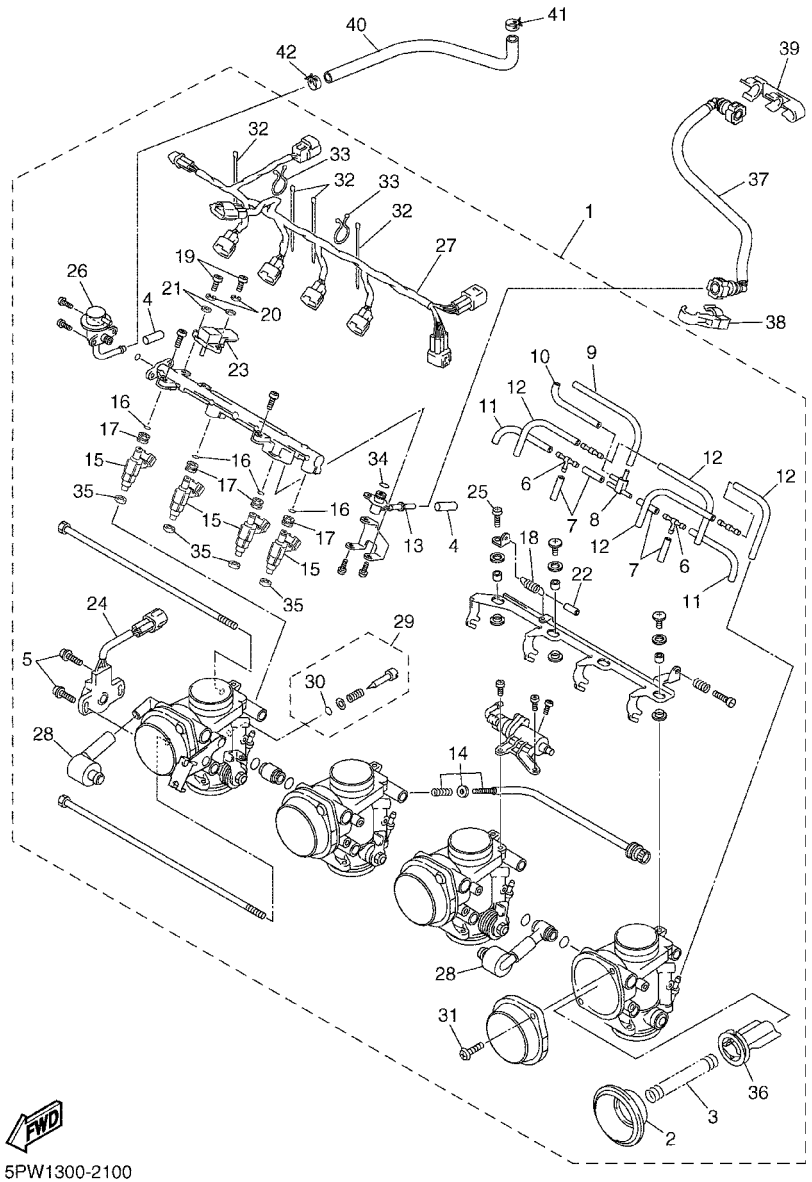

5PW1300-2100

FIG. 10 ADMISION 2

REF. NO.	CODIGO NO.	DESCRIPCION	5PW1					OBSERVACION
28	3LN–24515–00	.RED DE FILTRO 2	2					
29	5JW–14104–00	.CJTO. TORNNILLO DE AIRE	4					
30	3H1–14147–00	..ANILLO O	1					
31	4KM–14216–00	.TORNILLO	8					
32	4KM–14137–00	.PRESILLA	4					
33	5PW–14137–00	.PRESILLA	2					
34	5JW–14147–00	.ANILLO O	1					
35	90430–09002	.JUNTA	4					
36	5PW–14112–00	.VALVULA DE ACELERACION 1	4					
37	5PW–13971–00	ANILLO DE ESPACIADOR	1					
38	90464–16007	BRIDA	1					
39	90464–16005	BRIDA	1					
40	5PW–13972–00	TUBO, COMBUSTIBLE 2	1					
41	90467–12003	PRESILLA	1					
42	90467–120A1	PRESILLA	1					

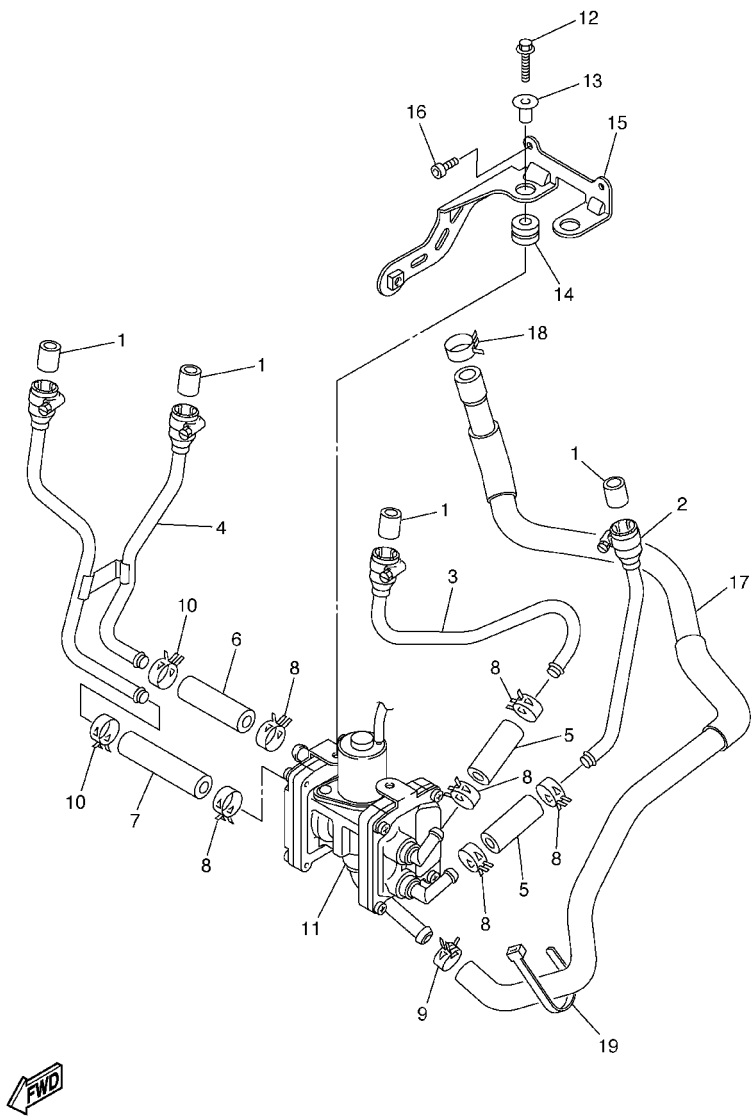

5PW1300-2110

FIG. 11 SYSTEMA DE INDUCCION DE AIRE

REF. NO.	CODIGO NO.	DESCRIPCION	5PW1					OBSERVACION
1	4KM–14714–01	EMPAQUE DE SILENCIADOR	4					
2	5JJ–14872–00	TUBO 2	1					
3	5PW–14873–00	TUBO 3	1					
4	5JJ–14874–00	TUB0 4	1					
5	5JJ–14882–00	TUBO 2	2					
6	5JJ–14883–00	TUBO 3	1					
7	5JJ–14886–00	TUBO 6	1					
8	90467–15054	PRESILLA	6					
9	90467–16181	PRESILLA	1					
10	90467–15001	PRESILLA	2					
11	5PW–14803–00	VALVULA DE AIRE COMPLETA	1					
12	95827–06020	TUERCA DE REBORDE	2					
13	90387–07391	COLLAR	2					
14	90480–15316	TAPON	2					
15	5PW–14868–00	SOPORTE 2	1					
16	91317–06012	PERNO	2					
17	5PW–14881–00	TUBO 1	1					
18	90467–17089	PRESILLA	1					
19	90464–13077	BRIDA	1					

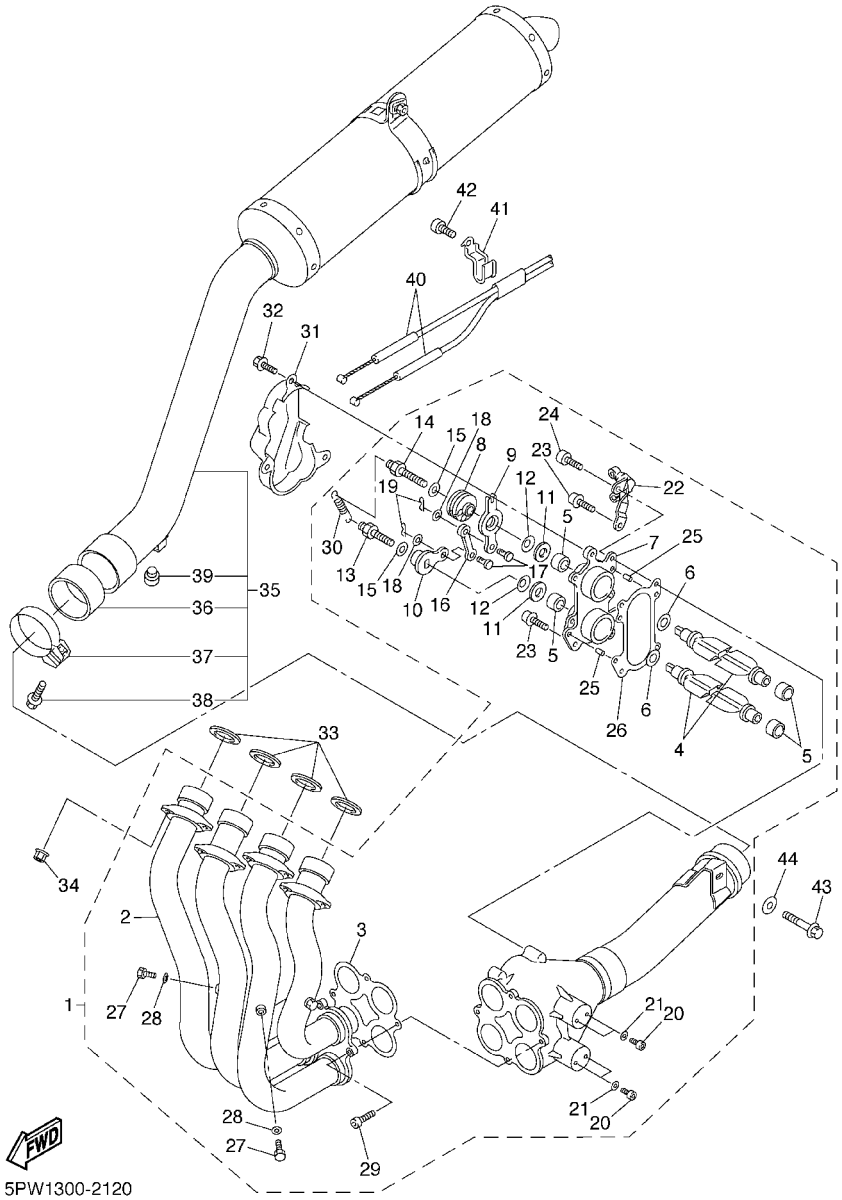

FIG. 12 DESCARGA

REF. NO.	CODIGO NO.	DESCRIPCION	5PW1					OBSERVACION
1	5PW–14610–00	TUBO DE ESCAPE COMPLETO 1	1					
2	5PW–14602–00	.TUBO DE ESPAPE COMPLETO	1					
3	5PW–14623–00	.EMPAQUE	1					
4	5PW–14821–00	.BRAZO DE EJE 1	2					
5	5PW–14638–01	.COLLAR	4					
6	90201–14014	.ARANDELA PLANA	2					
7	5PW–14811–01	.CAJA	1					
8	5PW–14865–00	.POLEA 1	1					
9	5PW–14889–00	.TAPA DE CAJA	1					
10	5PW–14858–00	.TAPA, DE CAJA	1					
11	90201–10M76	.ARANDELA PLANA	2					
12	5PW–14683–00	.GANCHO DE RESORTE	2					
13	5PW–14684–00	.PERNO DE GANCHO	1					
14	5PW–14777–00	.PERNO	1					
15	90201–050T4	.ARANDELA PLANA	2					
16	5PW–14836–00	.VARILLA	1					
17	5PW–1469V–00	.PASADOR	2					
18	90201–06431	.ARANDELA PLANA	2					
19	93410–06053	.BOLA	2					
20	91380–04006	.PERNO	4					
21	92990–04600	.ARANDELA	4					
22	5PW–14867–00	.SOPORTE	1					
23	90119–06115	.TORNILLO CON ARANDELA	4					
24	90110–06025	.TORNILLO ALLEN	1					
25	93606–07M17	.PASADOR DE CLAVIJA	2					
26	5PW–14643–00	.JUNTA BRIDA DE ESCAPE	1					
27	97080–06008	.PERNO	4					

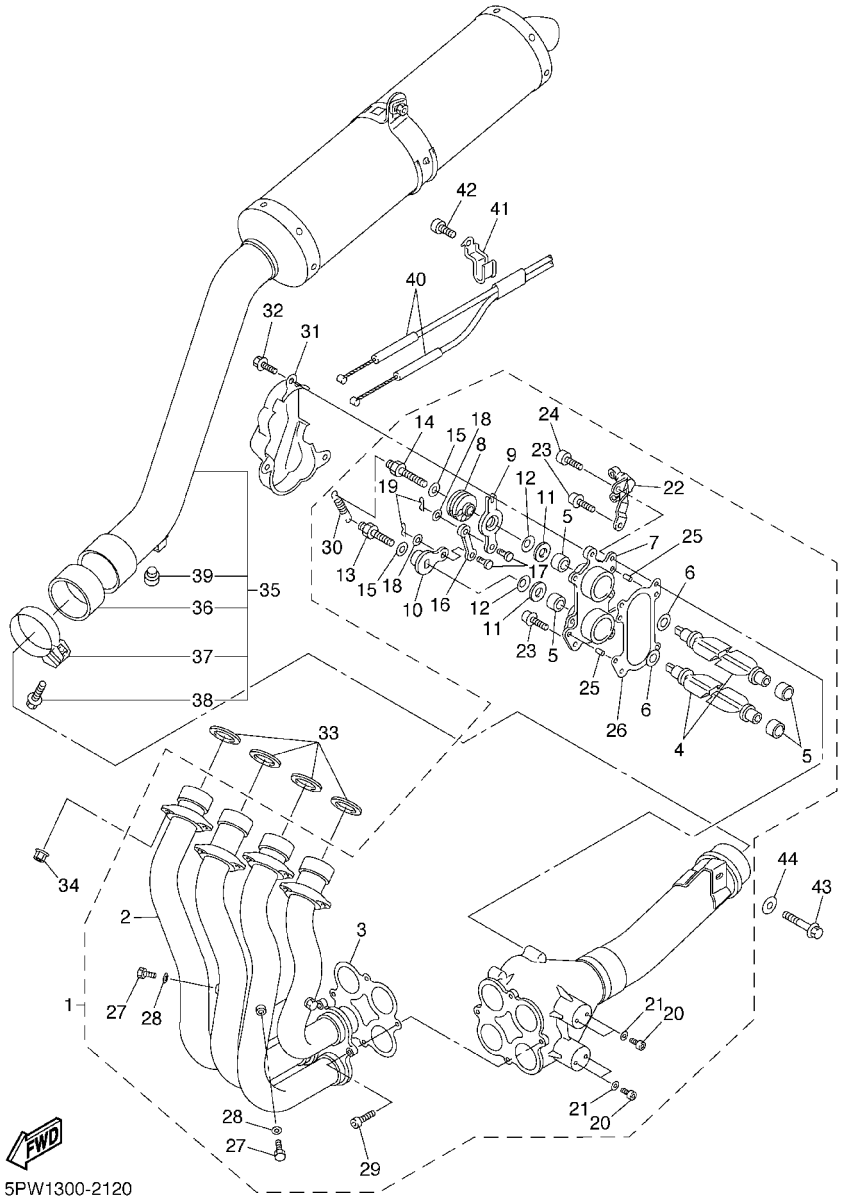

5PW1300-2120

FIG. 12 DESCARGA

REF. NO.	CODIGO NO.	DESCRIPCION	5PW1					OBSERVACION
28	92990–06600	.ARANDELA	4					
29	90110–06025	.TORNILLO ALLEN	4					
30	90506–10003	.RESORTE DE TENSION	1					
31	5PW–14826–00	PROTECTOR DE VALVULA DE ESCAPE	1					
32	90119–06187	TORNILLO CON ARANDELA	3					
33	4FM–14613–00	JUNTA, TUBO DE ESCAPE	4					
34	90179–08410	TUERCA	8					
35	5PW–14710–00	TUBO DE ESCAPE COMPLETO 1	1					
36	4XV–14714–00	.EMPAQUE DE SILENCIADOR	1					
37	5JJ–14715–00	.BANDA DE SILENCIADOR	1					
38	95817–08030	.TUERCA DE REBORDE	1					
39	4FM–24181–00	.AMORTIGUADOR DE MONTAJE	1					
40	5PW–1130E–00	CABLE DE POLEA	1					
41	90462–10013	BRIDA	1					
42	91314–06010	PERNO	1					
43	95817–08040	TUERCA DE REBORDE	1					
44	90201–08612	ARANDELA PLANA	1					

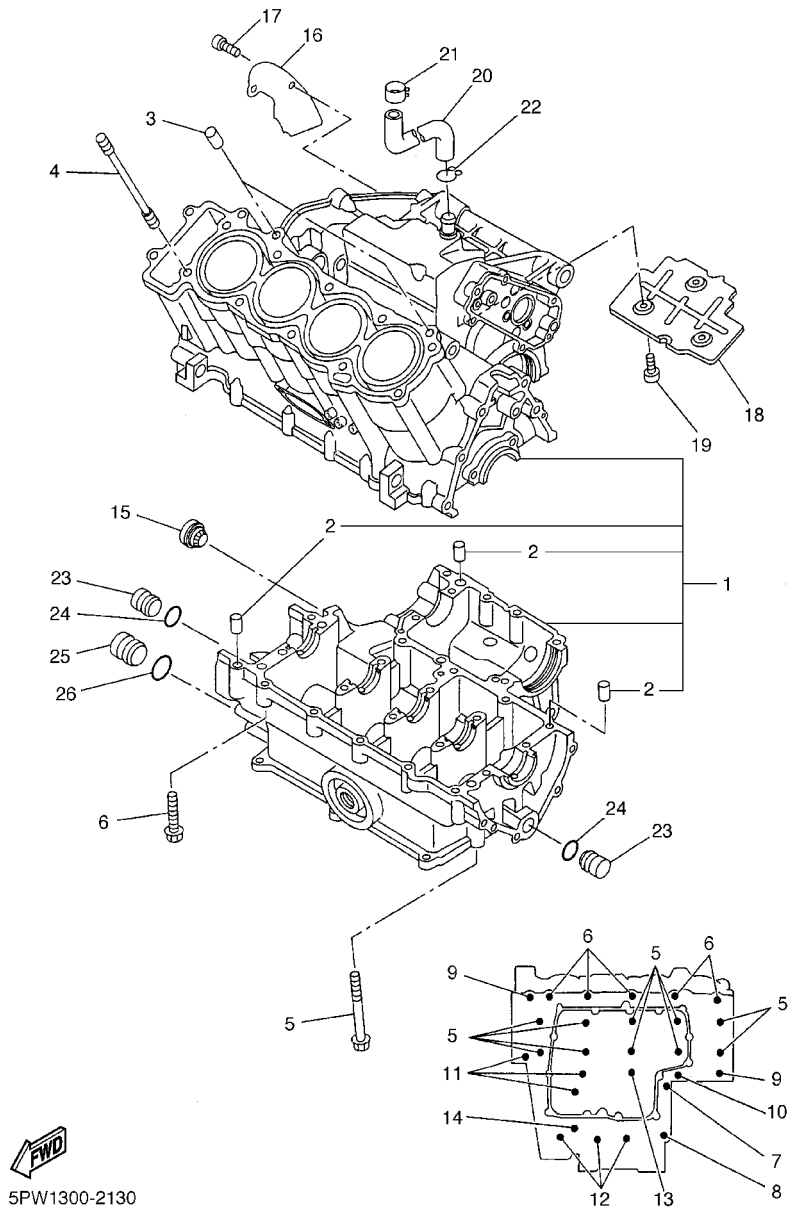

FIG. 13 CARTER

REF. NO.	CODIGO NO.	DESCRIPCION	5PW1					OBSERVACION
1	5PW–15100–00	CARTER COMPLETO	1					
2	99530–10014	.PASADOR, DE ESPIGA	3					
3	99530–10114	PASADOR, DE ESPIGA	2					
4	90116–10619	ESPARRAGO	10					
5	90119–09002	TORNILLO CON ARANDELA	10					
6	95817–06055	TUERCA DE REBORDE	5					
7	90105–08015	TORNILLO	1					
8	95817–08050	TUERCA DE REBORDE	1					
9	90109–065G3	PERNO	2					
10	95817–06060	TUERCA DE REBORDE	1					
11	95817–06070	TUERCA DE REBORDE	3					
12	95817–06045	TUERCA DE REBORDE	3					
13	95814–06050	TUERCA DE REBORDE	1					
14	95817–06065	TUERCA DE REBORDE	1					
15	5PW–15361–00	MEDIDOR DE NIVEL	1					
16	4XV–11165–00	PLACA RESPIRADERO	1					
17	90110–06018	TORNILLO ALLEN	2					
18	4XV–11145–00	PLACA RESPIRADERO 2	1					
19	90110–06018	TORNILLO ALLEN	3					
20	90445–161K7	TUBO (L215)	1					
21	90468–08104	PRESILLA	1					
22	90467–14015	PRESILLA	1					
23	90338–16262	TAPON	2					
24	93210–12790	ANILLO O	2					
25	90338–20263	TAPON	1					
26	93210–16314	ANILLO O	1					

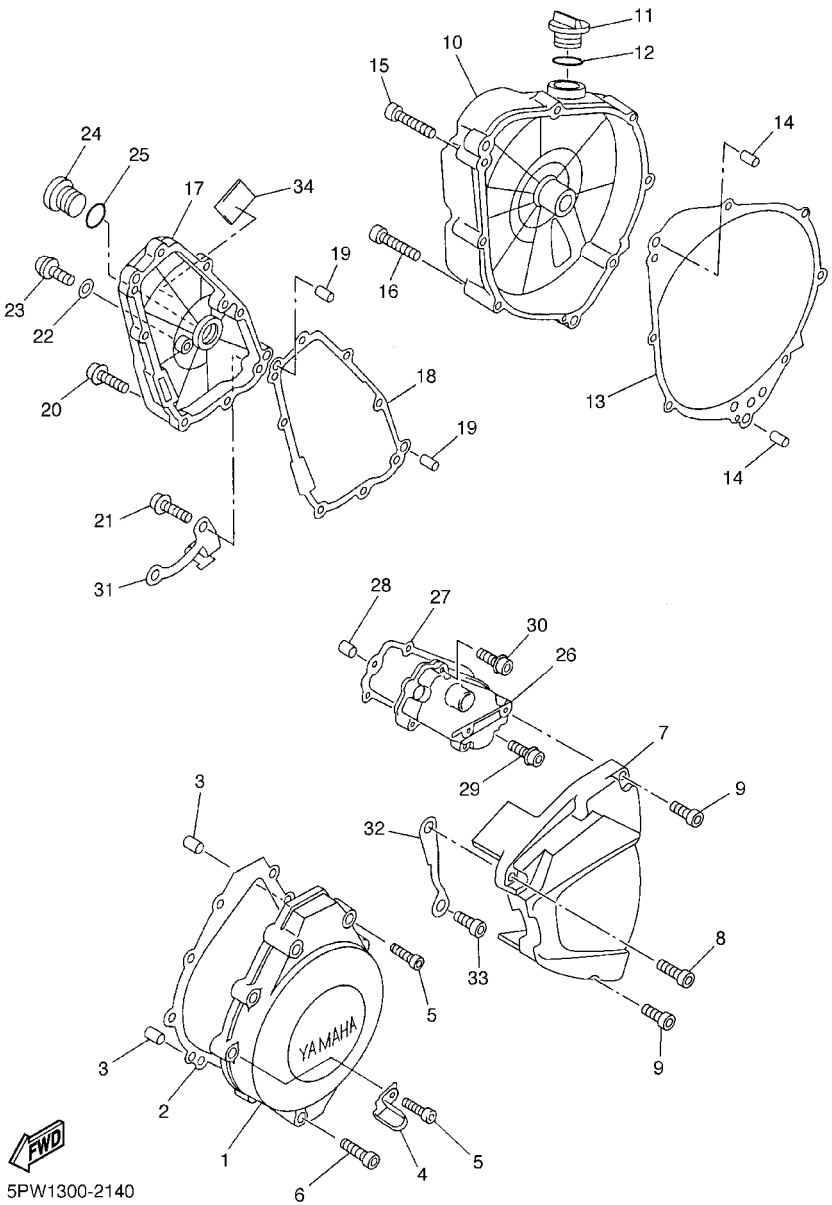

FIG. 14 CUBIERTA DE CARTER 1

REF. NO.	CODIGO NO.	DESCRIPCION	5PW1					OBSERVACION
1	5PW–15411–00	CUBIERTA DE CARTER 1	1					
2	5PW–15451–00	EMPAQ DE CUBIERTA DE CARTER	1					
3	99530–08012	PASADOR, DE ESPIGA	2					
4	90461–10003	GRAPA	1					
5	91314–06035	PERNO	8					
6	91314–06020	PERNO	1					
7	5PW–15418–00	CUBIERTA CAJA DE CADENA	1					
8	90110–06224	TORNILLO ALLEN	1					
9	91314–06025	PERNO	2					
10	5PW–15421–01	TAPA DE CARTER DERECHA	1					
11	3F9–15362–00	TAPON DEL NIVEL DE ACEITE	1					
12	93210–27194	ANILLO O	1					
13	5PW–15461–00	JUNTA TAPA CARTER DRCHO	1					
14	93608–21002	PASADOR DE CLAVIJA	2					
15	91314–06040	PERNO	5					
16	91314–06050	PERNO	3					
17	5PW–15416–00	CUBIERTA DE BOMBA DE ACEITE	1					
18	5JJ–15456–00	EMPAQ CUBTA.BOMBA ACEITE 1	1					
19	99530–08012	PASADOR, DE ESPIGA	2					
20	90109–06014	PERNO	4					
21	90109–06015	PERNO	4					
22	90430–08143	JUNTA	1					
23	92014–08016	PERNO	1					
24	90340–32080	TORNILLO, DE DRENAJE	1					
25	93210–32172	ANILLO O	1					
26	5PW–15425–00	CUBIERTA DE GENERADOR 2	1					
27	5JJ–15463–00	EMPAQ CUBIERTA 2	1					

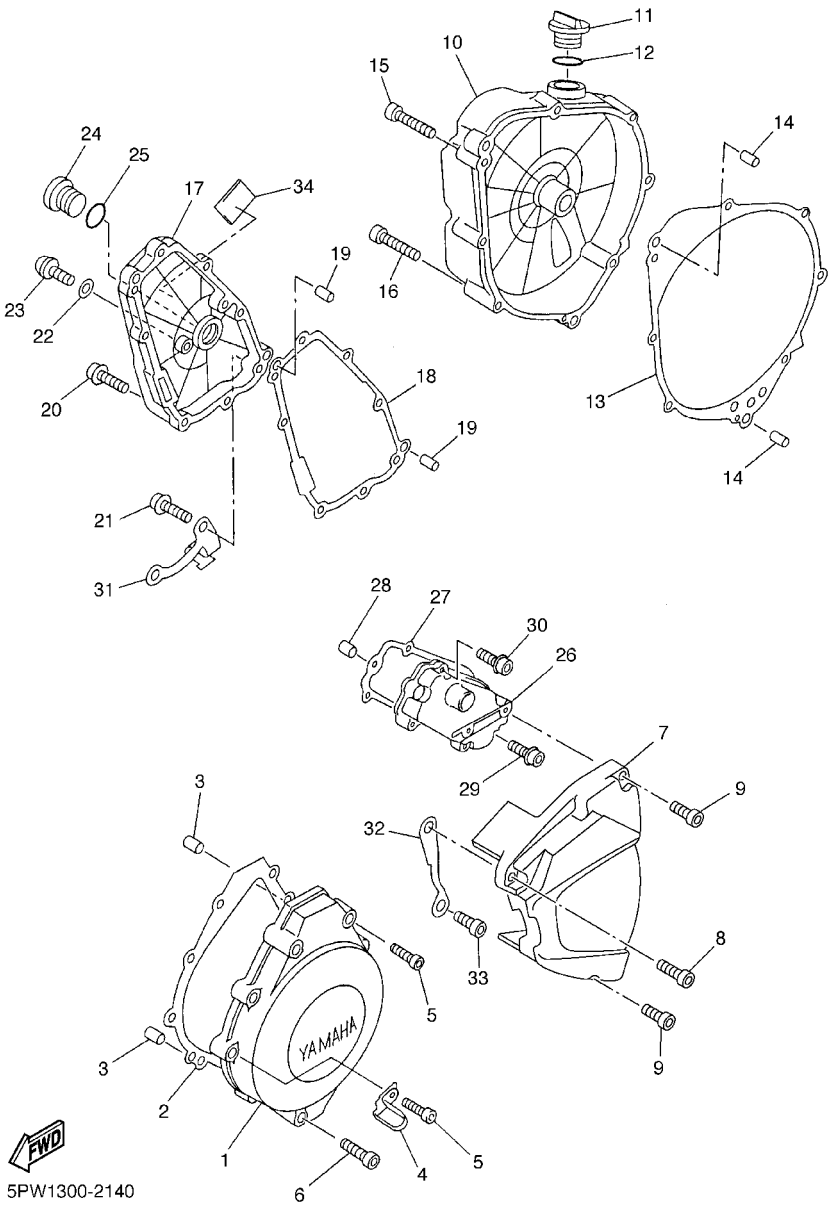

FIG. 14 CUBIERTA DE CARTER 1

REF. NO.	CODIGO NO.	DESCRIPCION	5PW1					OBSERVACION
28	99530–08012	PASADOR, DE ESPIGA	2					
29	90109–06014	PERNO	2					
30	90109–06015	PERNO	3					
31	4XV–15441–00	SOSTEN DE CABLE DE EMBRAGUE	1					
32	4XV–15113–00	PLACA	1					
33	90110–06136	TORNILLO ALLEN	1					
34	5JW–2139X–00	AMORTIGUADOR	1					

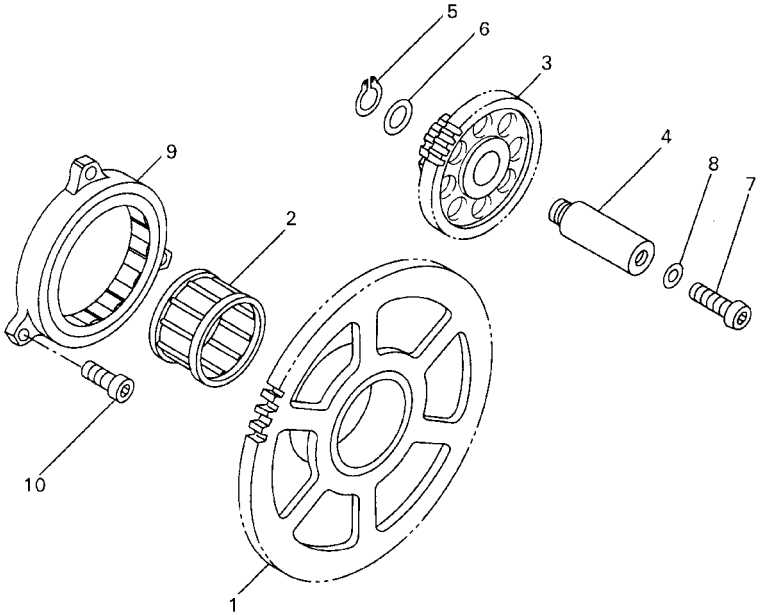

5JJ1300-0150

FIG. 15 ARRANQUE

REF. NO.	CODIGO NO.	DESCRIPCION	5PW1					OBSERVACION
1	5PW–15515–00	ENGRANAJE 3	1					
2	93310–338S6	COJINETE	1					
3	5JJ–15517–00	ENGRENAJE POSICION 2DA	1					
4	4XV–15521–00	EJE 1	1					
5	93410–08072	BOLA	1					
6	90201–08089	ARANDELA PLANA	1					
7	92017–06014	PERNO	1					
8	90430–06014	JUNTA	1					
9	4XV–15570–00	EMBRAGUE DEL ARRANQUE COMPLETA	1					
10	90110–06065	TORNILLO ALLEN	3					

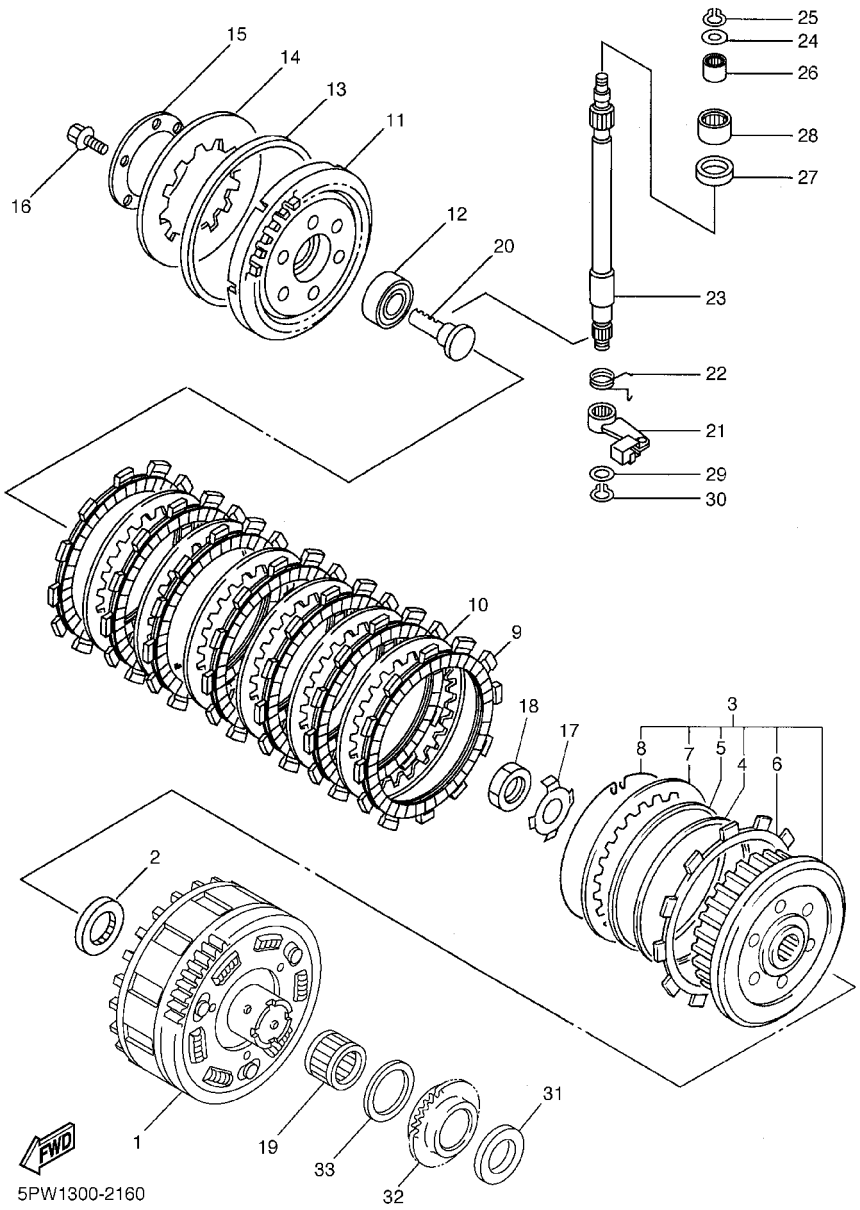

FIG. 16 EMBRAGUE

REF. NO.	CODIGO NO.	DESCRIPCION	5PW1					OBSERVACION
1	5PW–16150–00	CAMPANA DE EMBRAGUE	1					
2	26H–16154–00	ARANDELA, DE EMPUJE 1	1					
3	4XV–16370–00	COPA DE EMBRAGUE COMPLETA	1					
4	4XV–16384–00	.PLACA DE ASIENTO	1					
5	36Y–16383–00	.RESORTE DE COPA DE EMBRAGUE	1					
6	4XV–16331–00	.DISCO, DE FRICCION	1					
7	2H7–16325–00	.DISCO, DE EMBRAGUE	1					
8	2H7–16385–00	.RESORTE DE COPA DE EMBRAGUE	1					
9	341–16321–13	PLACA DE FRICCION	7					
10	2H7–16325–00	DISCO, DE EMBRAGUE	6					
11	4XV–16351–00	PLATO DE PRESION	1					
12	93306–00304	COJINETE	1					
13	36Y–16335–00	CAJA DE RESORTE	1					
14	36Y–16334–00	RESORTE DE EMBRAGUE 2	1					
15	1TX–16352–00	PLACA DE PRESION 2	1					
16	95817–06025	TUERCA DE REBORDE	6					
17	90215–25001	ARANDELA DE CIERRE	1					
18	90179–20003	TUERCA	1					
19	93310–228S5	COJINETE	1					
20	4XV–16356–01	VARILLA DE EMPUJE 1	1					
21	4XV–16340–10	PALANCA DE EMPUJE COMPLETA	1					
22	90508–164B2	RESORTE DE TORSION	1					
23	4XV–16382–00	EJE DE PALANCA DE EMPUJE	1					
24	92907–08600	ARANDELA	1					
25	99001–07600	PRESILLA REDONDA	1					
26	93317–11020	COJINETE	1					
27	93102–15212	SELLO ACEITE	1					

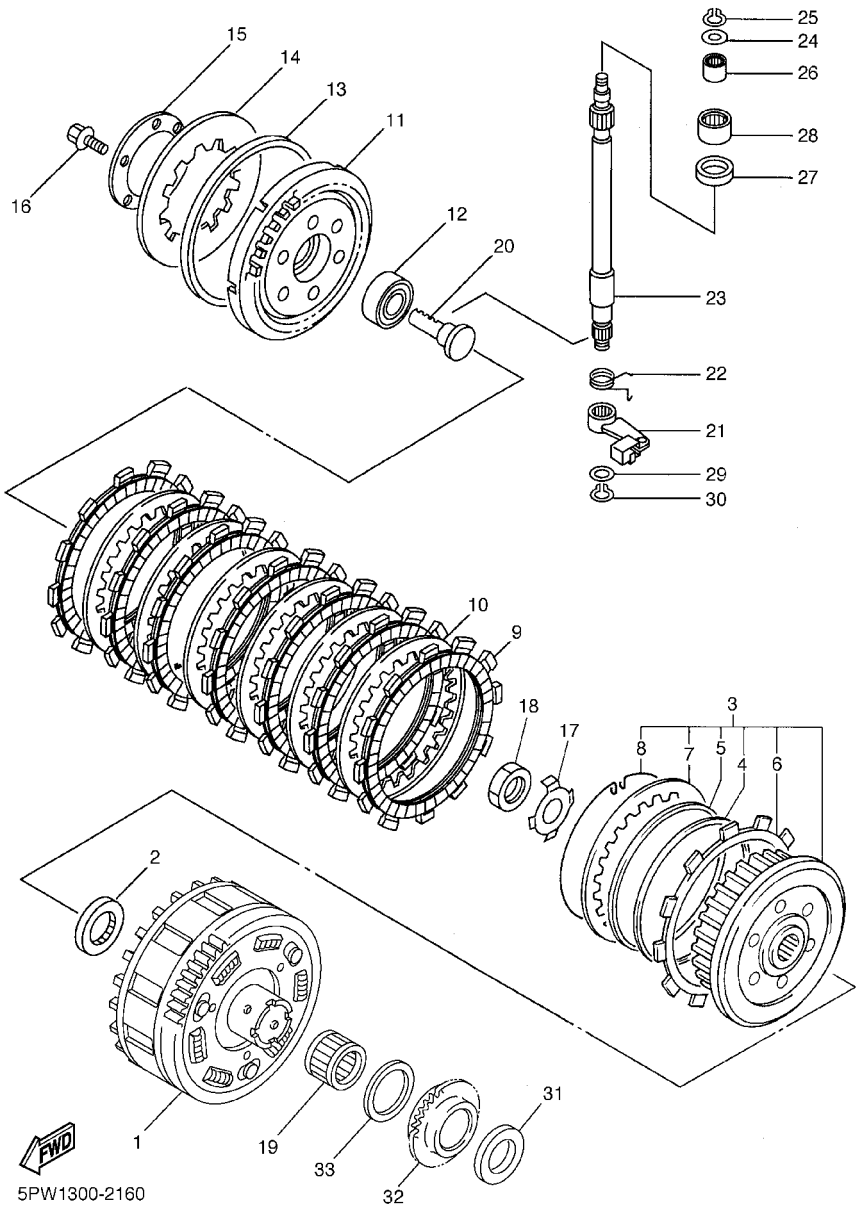

FIG. 16 EMBRAGUE

REF. NO.	CODIGO NO.	DESCRIPCION	5PW1					OBSERVACION
28	93315–31502	COJINETE	1					
29	90201–10614	ARANDELA PLANA	1					
30	99009–10400	PRESILLA REDONDA	1					
31	4XV–16154–00	ARANDELA, DE EMPUJE 1	1					
32	5PW–13354–01	CATALINA	1					
33	90201–43008	ARANDELA PLANA	1					

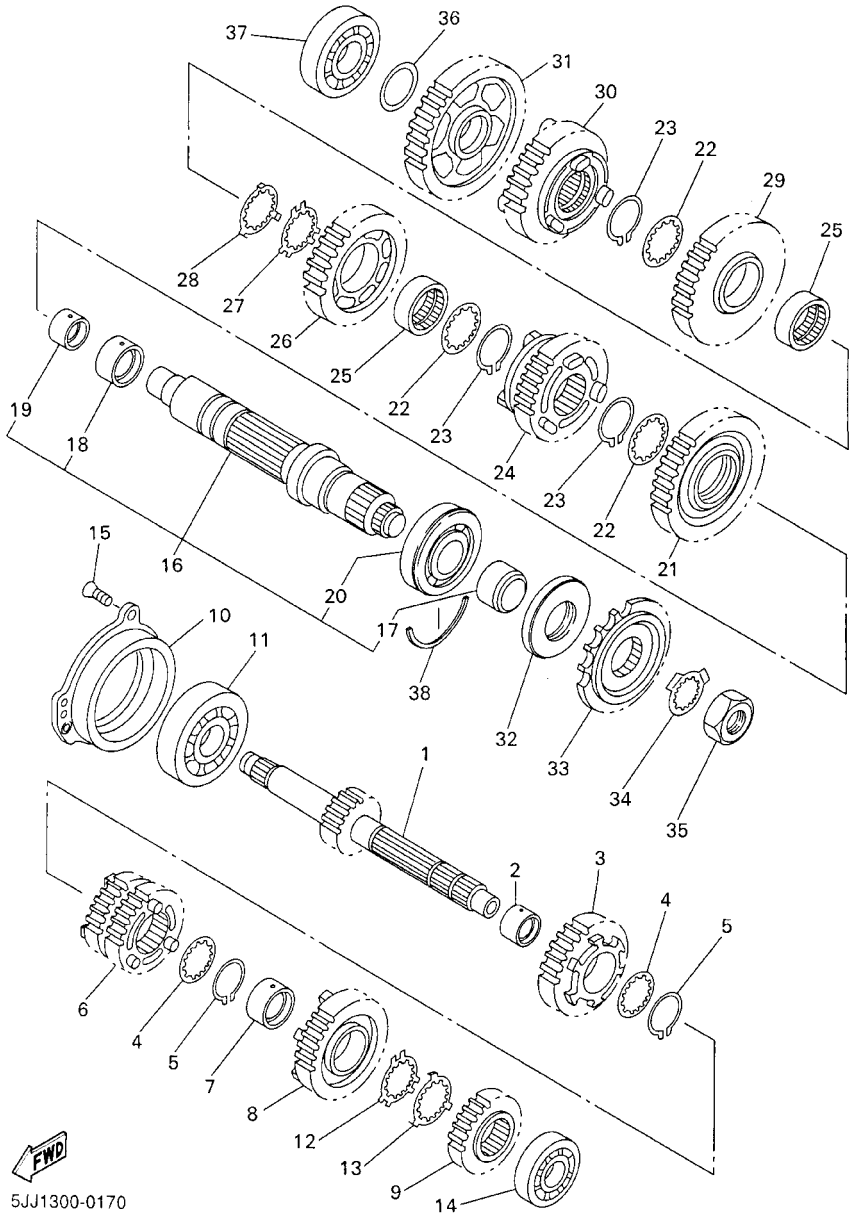

FIG. 17 TRANSMISION

REF. NO.	CODIGO NO.	DESCRIPCION	5PW1					OBSERVACION
1	5JJ–17411–01	EJE PRIMARIO	1					
2	90387–2811B	COLLAR	1					
3	5JJ–17151–00	ENGRANAJE PINON DE 5TA (25T)	1					
4	90209–25342	ARANDELA DE SEPARACION	2					
5	93440–28062	BOLA	2					
6	5JJ–17131–00	ENGRANAJE PINON DE 3RA (20/21T)	1					
7	90387–2810U	COLLAR	1					
8	5JJ–17161–00	ENGRANAJE PINON 6TA (26T)	1					
9	5JJ–17121–01	ENGRANAJE DE PINON DE 2DA (19T)	1					
10	5JJ–15163–00	CAJA DE COJINETE 1	1					
11	93306–37807	COJINETE	1					
12	90209–25349	ARANDELA DE SEPARACION	1					
13	90209–25350	ARANDELA DE SEPARACION	1					
14	93306–27208	COJINETE	1					
15	90149–06286	TORNILLO DE REGLAJE	3					
16	5JJ–17402–00	EJE DE TRACCION COMPLETO	1					
17	5JJ–17158–00	.COLLAR 1	1					
18	90387–3311C	.COLLAR	1					
19	90387–2511A	.COLLAR	1					
20	93306–20705	.COJINETE	1					
21	5JJ–17221–00	ENGRANAJE RUEDA DE 2DA (35T)	1					
22	90209–30344	ARANDELA DE SEPARACION	3					
23	93440–32063	BOLA	3					
24	5PW–17261–00	ENGRANAJE DE RUEDA 6TA (29T)	1					
25	90387–3310V	COLLAR	2					
26	5JJ–17241–00	ENGRANAJE DE RUEDA 4TA (28T)	1					
27	90209–30345	ARANDELA DE SEPARACION	1					

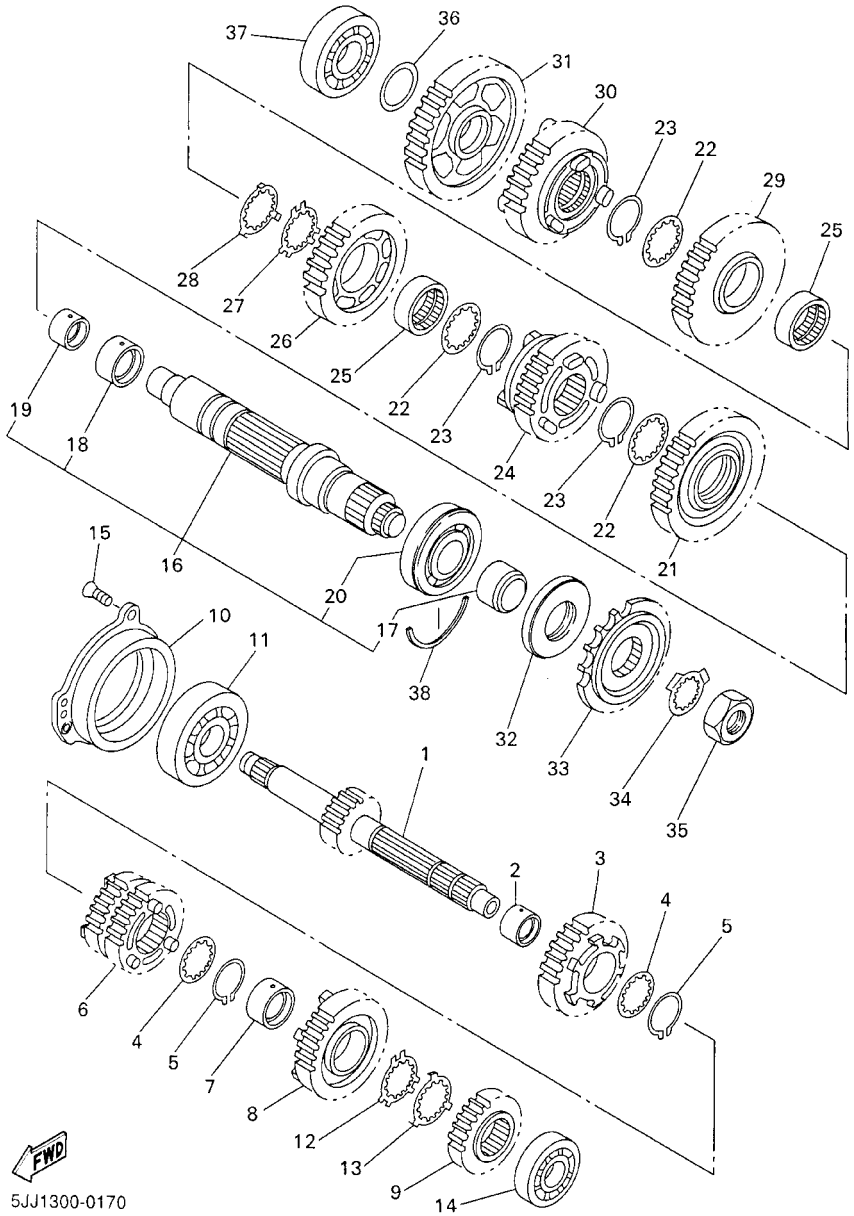

FIG. 17 TRANSMISION

REF. NO.	CODIGO NO.	DESCRIPCION	5PW1					OBSERVACION
28	90209–30343	ARANDELA DE SEPARACION	1					
29	5JJ–17231–00	ENGRANAJE RUEDA DE 3RA (30T)	1					
30	5JJ–17251–10	ENGRANAJE DE RUEDA 5TA (30T)	1					
31	5JJ–17211–00	ENGRANAJE RUEDA DE 1RA (35T)	1					
32	93102–45465	SELLO ACEITE	1					
33	4XV–17460–00	CORONA (16T)	1					
34	90215–30233	ARANDELA DE CIERRE	1					
35	90179–22003	TUERCA	1					
36	90201–224L4	ARANDELA PLANA	1					
37	93306–37209	COJINETE	1					
38	93440–72049	BOLA	1					

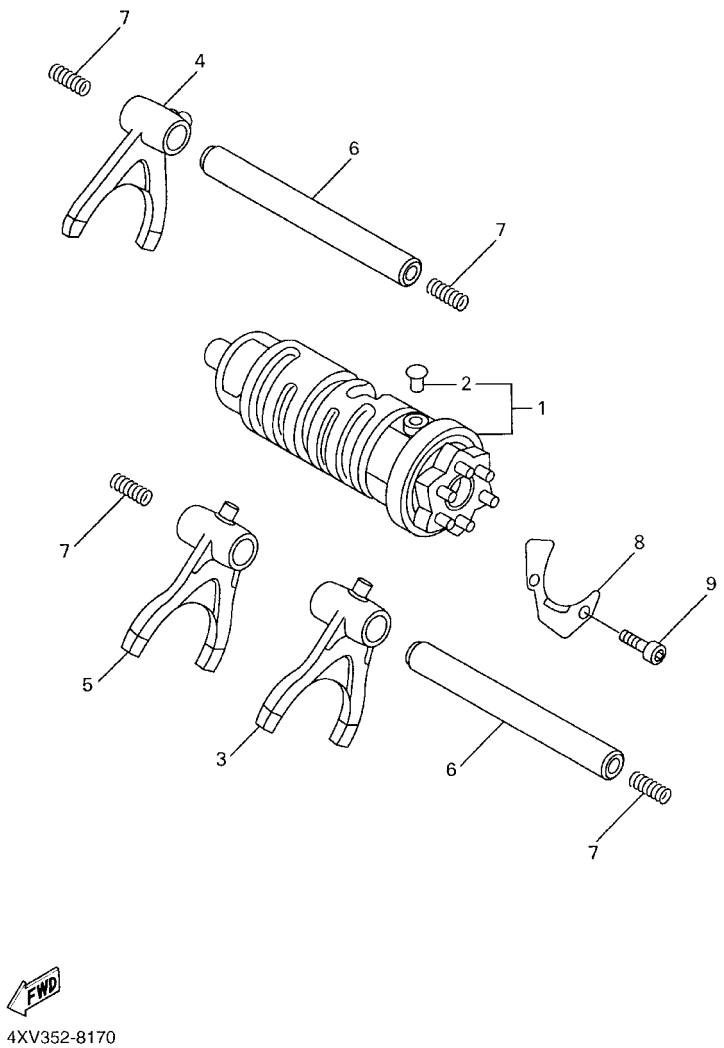

FIG. 18 LEVA DE CAMBIO. HORQ

REF. NO.	CODIGO NO.	DESCRIPCION	5PW1					OBSERVACION
1	5PW–18540–00	LEVADEL CAMBIO COMPLETA	1					
2	136–18542–00	.PUNTO MVERTO	1					
3	4XV–18511–00	HORQUILLA DEL CAMBIO 1	1					
4	5JJ–18512–00	HORQUILLA DEL CAMBIO 2	1					
5	5PW–18513–00	HORQUILLA DE CAMBIO 3	1					
6	4XV–18531–00	BARRA GUIA HORQ. CAMBIO 1	2					
7	90501–064L1	RESORTE DE COMPRESION	4					
8	4XV–18536–00	TOPE DE PALANCA SELECTOR	1					
9	90110–06226	TORNILLO ALLEN	2					

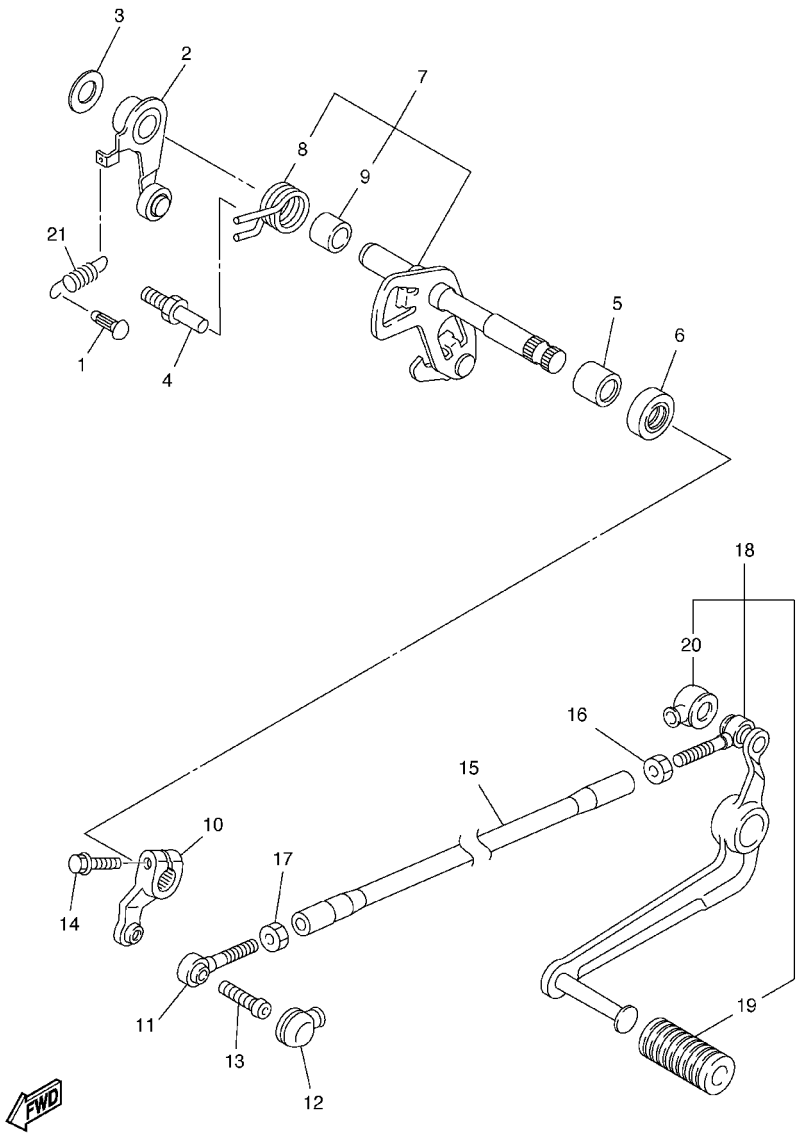

5PW1300-2190

FIG. 19 EJE DE CAMBIO. PEDAL

REF. NO.	CODIGO NO.	DESCRIPCION	5PW1					OBSERVACION
1	132–16346–00	GANCHO DE RESORTE	1					
2	5JJ–18140–00	PALANCA DE TOPE COMPLETA	1					
3	90201–120K4	ARANDELA PLANA	1					
4	4XV–18127–00	PASADOR DE PALANCA	1					
5	93315–11206	COJINETE	1					
6	93101–12004	SELLO ACEITE	1					
7	5PW–18101–00	EJE SELECTOR COMPLETO	1					
8	90508–32682	.RESORTE DE TORSION	1					
9	90387–1211D	.COLLAR	1					
10	5PW–18112–00	BRAZO DEL CANBIO	1					
11	5LV–18116–00	VARILLA DE CONECTOR 1	1					
12	4XV–18154–00	CUBIERTA GUARDAPOLVO	1					
13	90111–06019	TORNILLO	1					
14	95824–06020	TUERCA DE REBORDE	1					
15	5PW–18115–00	VARILLA DEL CANBIO	1					
16	90170–06228	TUERCA	1					
17	95304–06700	TUERCA	1					
18	5PW–18110–00	PEDAL DE CAMBIO COMPLETO	1					
19	5EB–18113–00	.FUNDA DEL PEDAL DEL CAMBIO	1					
20	4XV–18154–00	.CUBIERTA GUARDAPOLVO	1					
21	90506–16005	RESORTE DE TENSION	1					

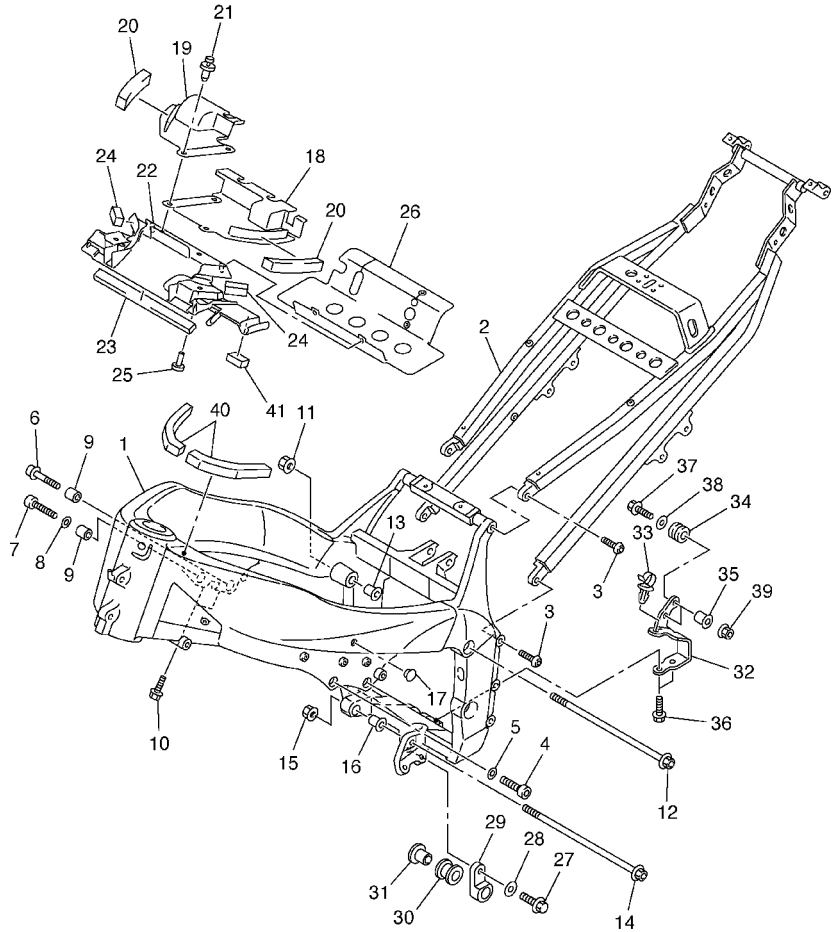

5PW1300-2200

FIG. 20 CUADRO

REF. NO.	CODIGO NO.	DESCRIPCION	5PW1					OBSERVACION
1	5PW–21110–00	ARMAZON COMPLETO	1					
2	5PW–21190–00	CUADRO TRASERO COMPLETA	1					
3	90149–10004	TORNILLO DE REGLAJE	4					
4	91314–10040	PERNO	2					
5	90201–10020	ARANDELA PLANA	2					
6	91314–10050	PERNO	1					
7	91314–10040	PERNO	1					
8	90201–10020	ARANDELA PLANA	2					
9	90387–12012	COLLAR	2					
10	95024–08035	PERNO, DE BRIDA	2					
11	90179–10696	TUERCA	1					
12	90109–104G5	PERNO	1					
13	5EB–21495–00	PERNO DE AJUSTE	1					
14	90110–10005	TORNILLO ALLEN	1					
15	90179–10696	TUERCA	1					
16	5EB–21495–00	PERNO DE AJUSTE	1					
17	90338–15004	TAPON	2					
18	5PW–2117M–00	CUBIERTA	1					
19	5PW–2117N–00	CUBIERTA 3	1					
20	5PW–21852–00	AMORTIGUADOR	2					
21	90269–07076	REMACHE	3					
22	5PW–2137Y–00	GUIA DE AIRE	1					
23	5PW–21486–00	AMORTIGUADOR 2	1					
24	5PW–21488–00	AMORTIGUADOR	2					
25	90269–08002	REMACHE	2					
26	5PW–2117F–00	CUBIERTA	1					
27	95817–08025	TUERCA DE REBORDE	1					

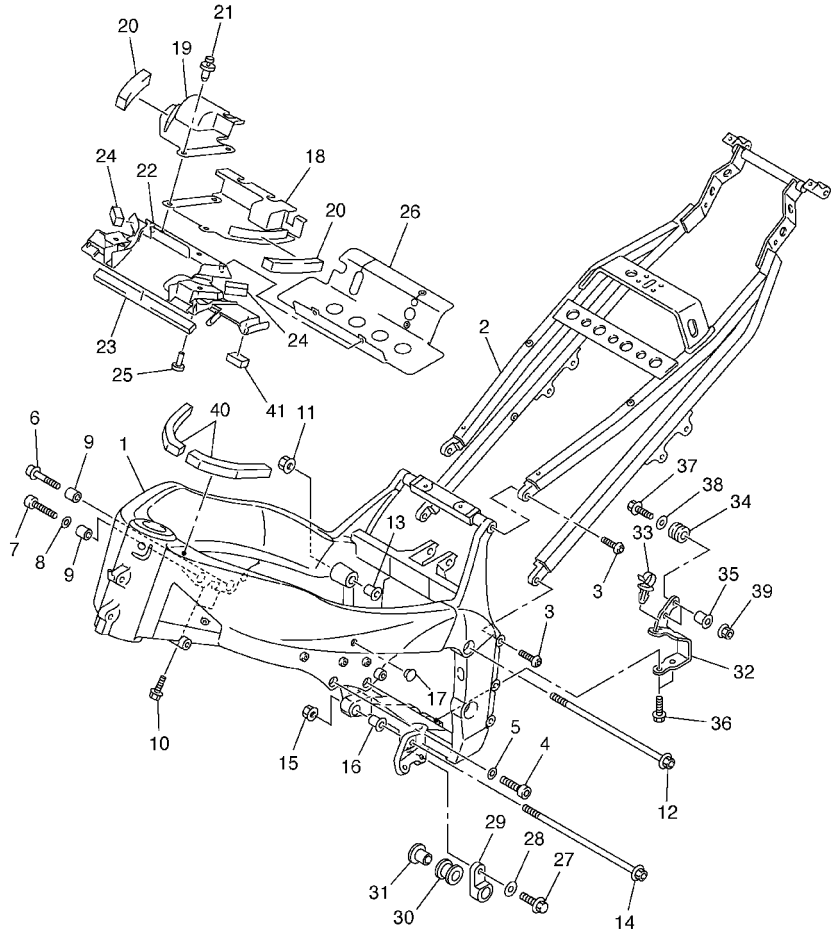

5PW1300-2200

FIG. 20 CUADRO

REF. NO.	CODIGO NO.	DESCRIPCION	5PW1					OBSERVACION
28	90201–08326	ARANDELA PLANA	1					
29	5PW–21446–00	SOPORTE DE SILENCIADOR 2	1					
30	4XV–27424–00	AMORTIGUADOR DE APOYAPIE 2	1					
31	90387–08005	COLLAR	1					
32	5PW–2116J–00	SOPORTE 7	1					
33	90464–09001	BRIDA	1					
34	90480–14604	TAPON	2					
35	90387–06M60	COLLAR	2					
36	95807–06014	TUERCA DE REBORDE	2					
37	95027–06025	PERNO, DE BRIDA	2					
38	90201–06063	ARANDELA PLANA	2					
39	95707–06500	TUERCA DE BRIDA	2					
40	3YF–2414J–10	EQUILIBRIO, CUBIERTA	2					
41	4J2–21778–00	AMORTIGUADOR DE MONTAJE	1					

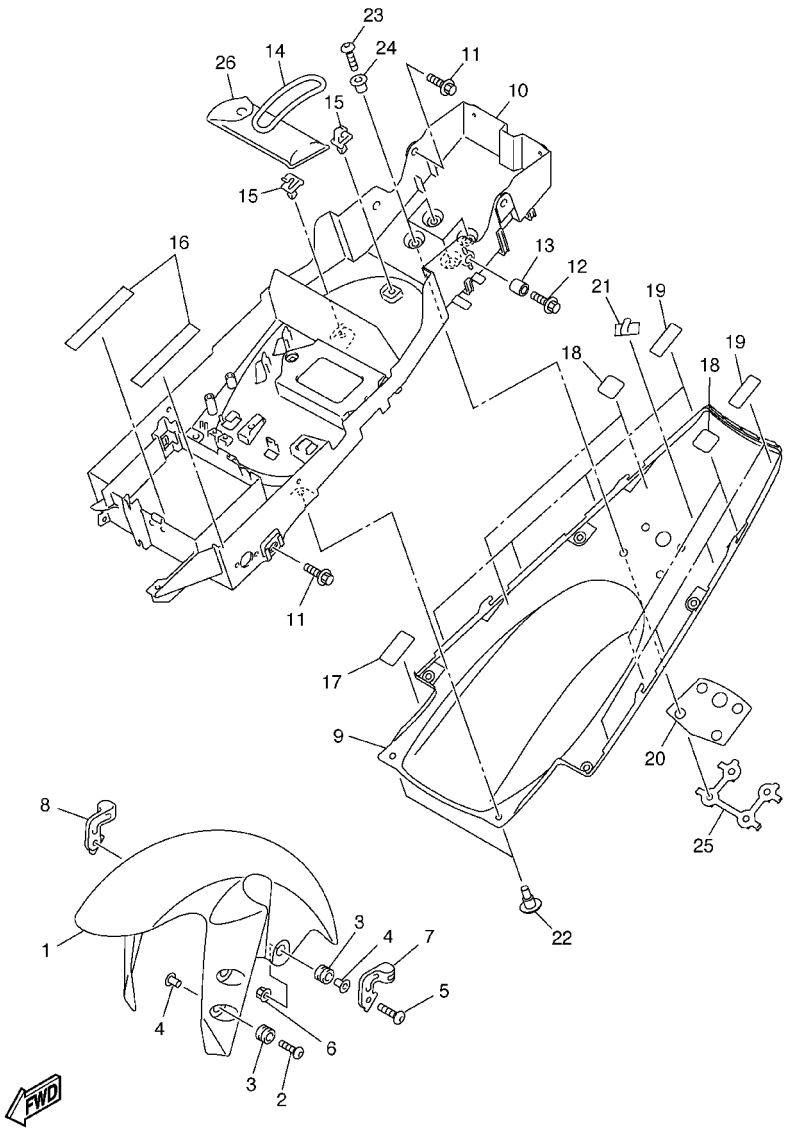

5PW1300-2210

FIG. 21 GUARDABARRO

REF. NO.	CODIGO NO.	DESCRIPCION	5PW1					OBSERVACION
1	5PW–21511–00–P0	GUARDABARRO DELANTERO	1					UR VRC1
	5PW–21511–00–P1	GUARDABARRO DELANTERO	1					UR DPBMC, DPBMC/BWC1
	5PW–21511–00–P2	GUARDABARRO DELANTERO	1					UR S3
2	90149–06302	TORNILLO DE REGLAJE	4					
3	90480–12072	TAPON	6					
4	90387–065J6	COLLAR	6					
5	90111–06030	TORNILLO	2					
6	95707–06500	TUERCA DE BRIDA	2					
7	5PW–25875–00	SOPORTE DE MANGUERA FRENO 1	1					
8	5PW–25876–00	SOPORTE DE MANGUERA FRENO 2	1					
9	5PW–21611–00–P0	GUARDABARRO TRASERO	1					UR VRC1
	5PW–21611–00–P1	GUARDABARRO TRASERO	1					UR DPBMC, DPBMC/BWC1
	5PW–21611–00–P2	GUARDABARRO TRASERO	1					UR S3
10	5PW–8212B–00	CAJA DE BATERIA	1					
11	90109–063F1	PERNO	4					
12	90119–06118	TORNILLO CON ARANDELA	2					
13	90387–08057	COLLAR	2					
14	4XV–21376–00	BANDA DE HERRAMIENTA	1					
15	90464–07259	BRIDA	2					
16	1AE–2834E–00	AMORTIGUADOR 1	2					
17	5PX–21268–00	SELLO	1					
18	1UF–15379–00	SELLO DE CARTER	4					
19	5PW–21732–00	SELLO 1	8					
20	5PW–21669–00	SELLO	1					
21	90465–04020	BRIDA	1					
22	90269–07077	REMACHE	2					
23	92017–06020	PERNO	4					

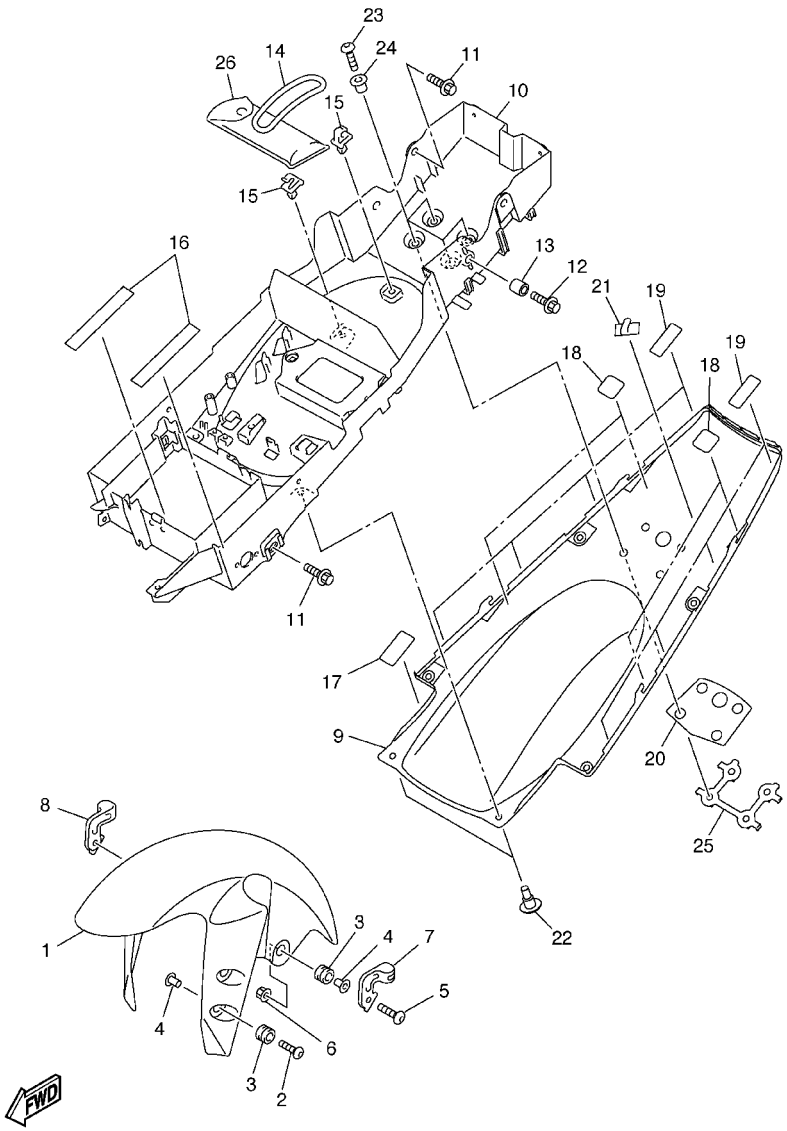

5PW1300-2210

FIG. 21 GUARDABARRO

REF. NO.	CODIGO NO.	DESCRIPCION	5PW1					OBSERVACION
24	90387–065G0	COLLAR	4					
25	5PW–2161G–00	SOPORTE 6	1					
26	5PW–28100–00	JUEGO DE HERRAMIENTAS	1					

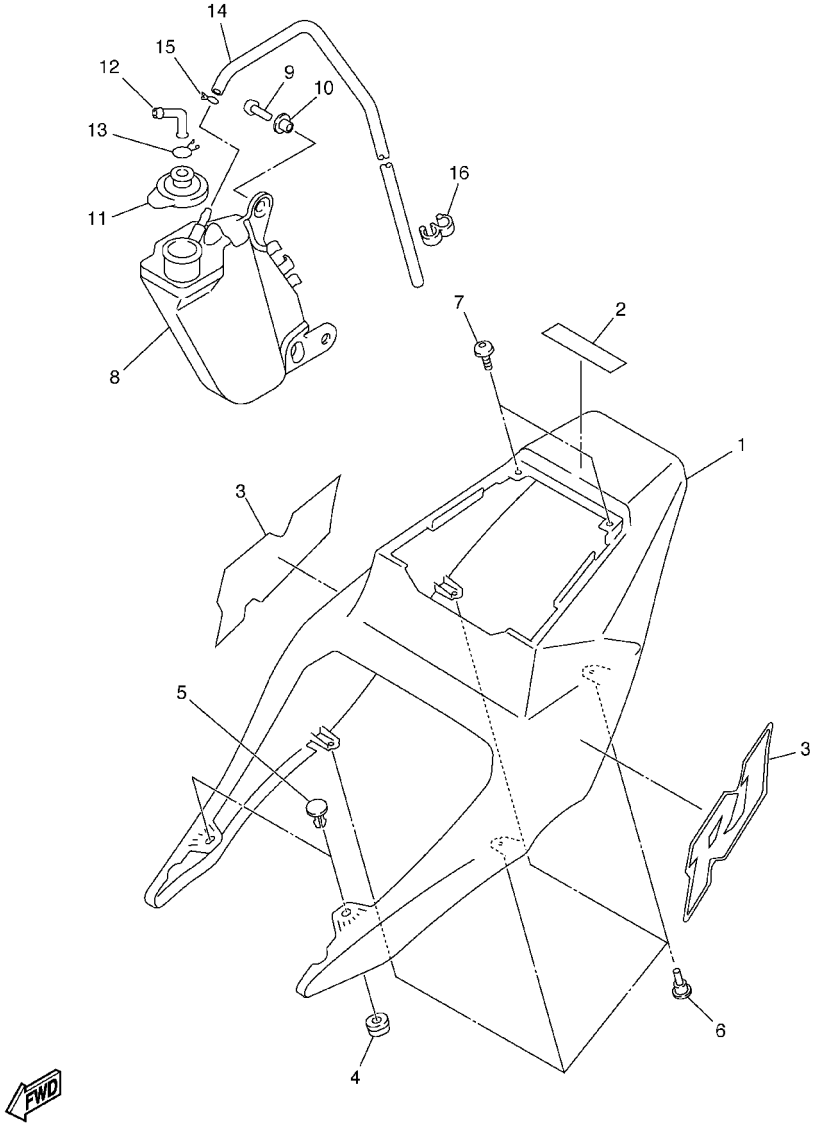

5PW1300-2220

FIG. 22 CUBIERTA LATERAL

REF. NO.	CODIGO NO.	DESCRIPCION	5PW1					OBSERVACION
1	5PW–21711–00–P0	JUEGO DE GRAFICOS	1					UR VRC1
	5PW–21711–00–P1	JUEGO DE GRAFICOS	1					UR DPBMC, DPBMC/BWC1
	5PW–21711–00–P2	JUEGO DE GRAFICOS	1					UR S3
2	99241–00080	EMBLEMA, YAMAHA	1					UR PARA VRC1, DPBMC/BWC1
	99246–00080	EMBLEMA, YAMAHA	1					UR PARA DPBMC
	99247–00080	EMBLEMA, YAMAHA	1					UR PARA S3
3	5PW–21737–00	EMBLEMA	2					PARA DPBMC/BWC1
4	5PW–2174X–00	AMORTIGUADOR	2					
5	90269–07076	REMACHE	2					
6	90269–07077	REMACHE	4					
7	90150–05039	TORNILLO CABEZA REDONDA	2					
8	5PW–21871–00	TANQUE DE RECUPERACION	1					
9	92017–06012	PERNO	2					
10	90387–062M9	COLLAR	2					
11	5EB–21875–00	TAPA	1					
12	26H–21828–00	CODO	1					
13	90467–11019	PRESILLA	1					
14	90445–081H0	TUBO (L460)	1					
15	90467–08003	PRESILLA	1					
16	90464–10075	BRIDA	1					

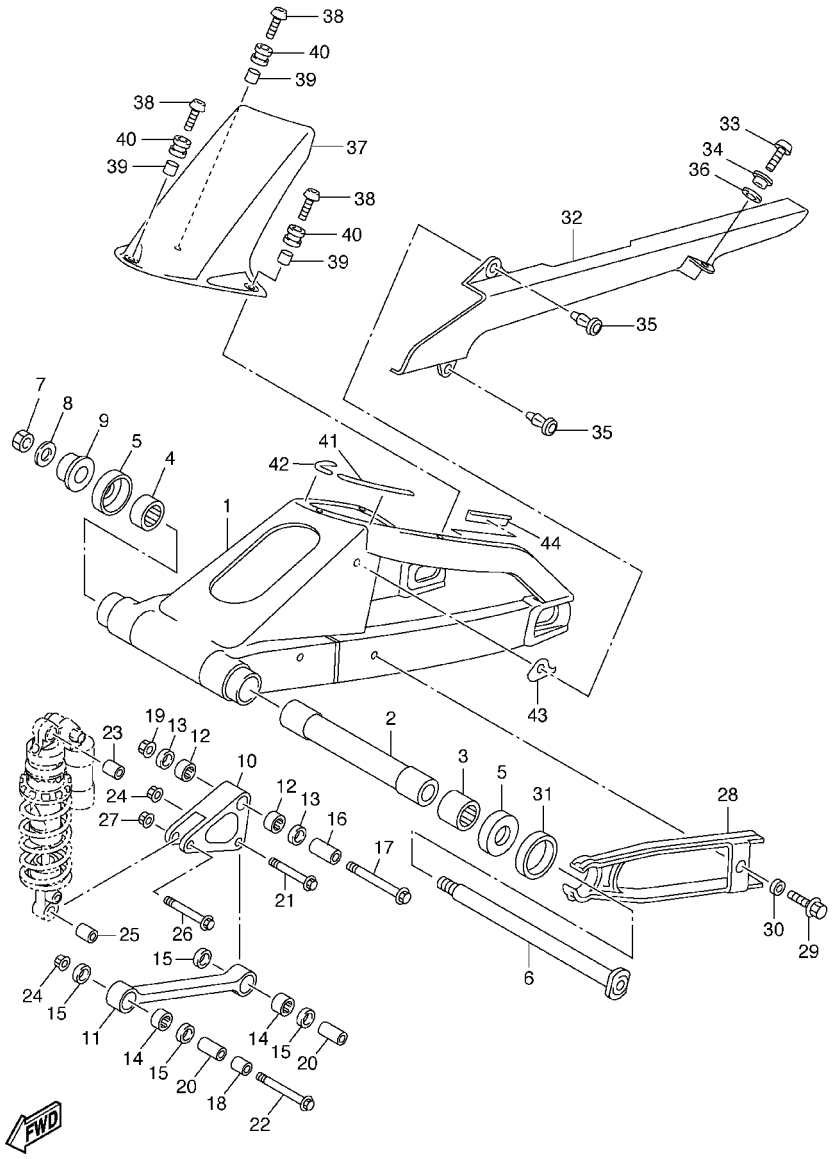

5PW1300-2230

FIG. 23 BRAZO TRASERO

REF. NO.	CODIGO NO.	DESCRIPCION	5PW1					OBSERVACION
1	5PW–22110–00	BRAZO TRASERO COMPLETO	1					
2	4XV–22184–00	BUJE	1					
3	93315–42523	COJINETE	1					
4	93315–42536	COJINETE	1					
5	5JJ–22128–00	TAPA DE EMPIJE 1	2					
6	4FN–22141–00	EJE DEL BARCULANTE	1					
7	90185–18167	TUERCA AUTOBLOCANTE	1					
8	90201–18013	ARANDELA PLANA	1					
9	5PW–22125–00	PERNO	1					
10	4XV–2217A–00	BRAZO REEURIO	1					
11	5PW–2217M–00	BRAZO 1	1					
12	93315–31758	COJINETE	2					
13	93109–17071	SELLO ACEITE	2					
14	93315–31758	COJINETE	2					
15	93109–17071	SELLO ACEITE	4					
16	90387–1012B	COLLAR	1					
17	90105–10021	TORNILLO	1					
18	90387–1013U	COLLAR	2					
19	95607–10200	TUERCA DE AUTO–CIERRE	1					
20	90387–1012A	COLLAR	2					
21	90105–10017	TORNILLO	1					
22	90105–10018	TORNILLO	1					
23	90387–1013U	COLLAR	1					
24	95607–10200	TUERCA DE AUTO–CIERRE	2					
25	90387–1012A	COLLAR	1					
26	90105–10017	TORNILLO	1					
27	95607–10200	TUERCA DE AUTO–CIERRE	1					

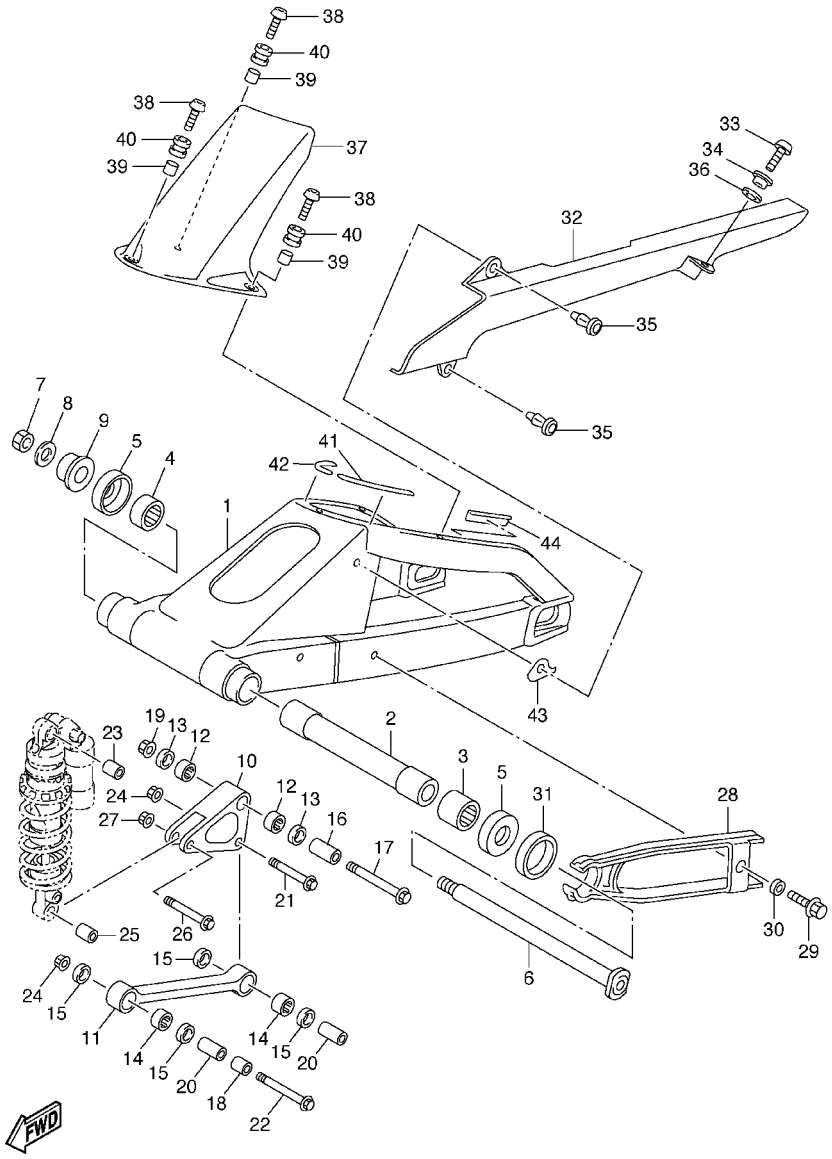

5PW1300-2230

FIG. 23 BRAZO TRASERO

REF. NO.	CODIGO NO.	DESCRIPCION	5PW1					OBSERVACION
28	5PW–22151–00	SELLO DE GUARDA	1					
29	90119–06096	TORNILLO CON ARANDELA	1					
30	90387–06372	COLLAR	1					
31	5JJ–2214F–00	AMORTIGUADOR 1	1					
32	5PW–22311–00	CABRECADENA	1					
33	90149–06302	TORNILLO DE REGLAJE	1					
34	90387–0603J	COLLAR	1					
35	90269–08002	REMACHE	2					
36	5PW–28372–00	AMORTIGUADOR	2					
37	5PW–21650–00–P0	GUARDABARRO TRANSERO COMP.	1					UR MBL2 PARA VRC1, DPBMC
	5PW–21650–00–P1	GUARDABARRO TRANSERO COMP.	1					UR S3 PARA S3
	5PW–21650–00–P2	GUARDABARRO TRANSERO COMP.	1					UR DPBMC PARA DPBMC/BWC1
38	90149–06302	TORNILLO DE REGLAJE	3					
39	90387–0600V	COLLAR	3					
40	90480–12005	TAPON	3					
41	5PW–22873–00	SELLO 1	1					
42	5PW–22874–00	SELLO 2	1					
43	5PW–22875–00	SELLO 3	1					
44	5PW–22876–00	SELLO 4	1					

FIG. 24 SUSPENSION TRASERO

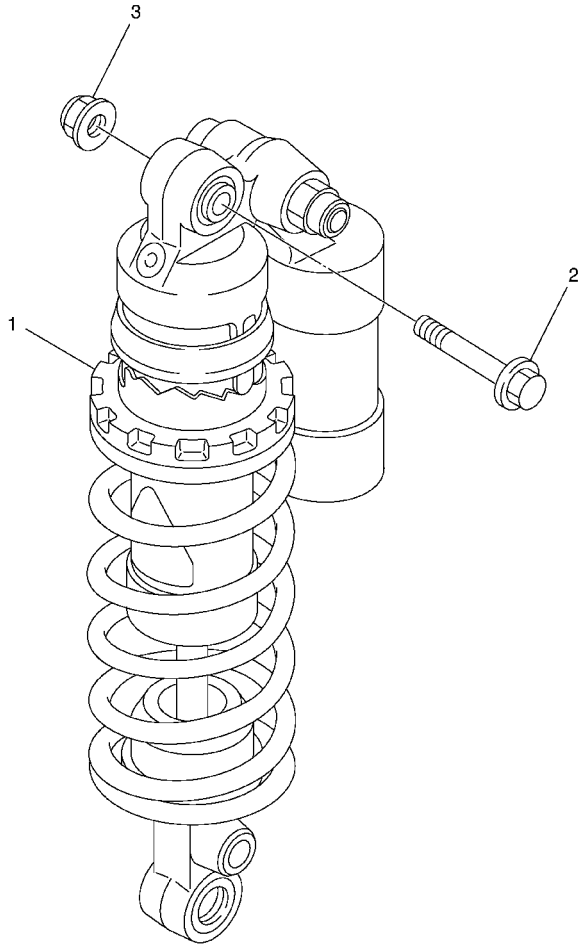

FWD

5PW1300-2240

REF. NO.	CODIGO NO.	DESCRIPCION	5PW1					OBSERVACION
1	5PW–22210–00	AMORTIGUADOR TRASERO COMPLETO	1					
2	90105–10020	TORNILLO	1					
3	95607–10200	TUERCA DE AUTO–CIERRE	1					

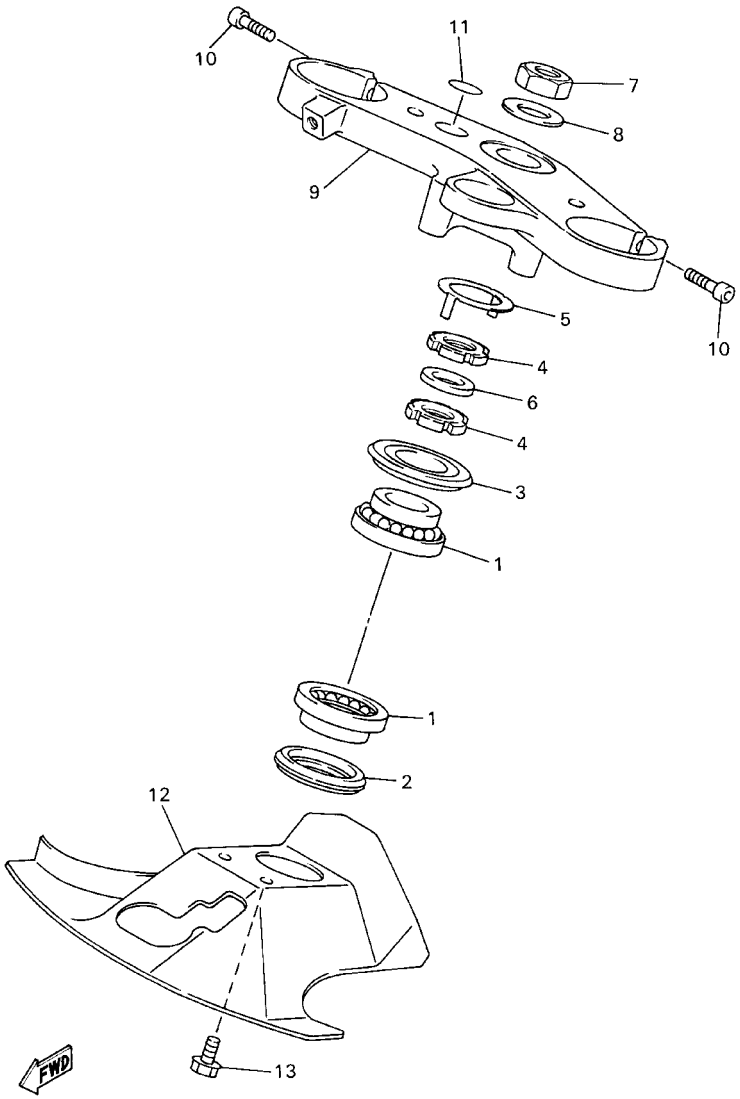

4XV352-8240

FIG. 25 DIRECCION

REF. NO.	CODIGO NO.	DESCRIPCION	5PW1					OBSERVACION
1	93399–99932	COJINETE	2					
2	3FV–23462–00	RETEN DE DIRECCION	1					
3	4XV–23415–01	CUBIERTA DE PISTA DE BOLAS 1	1					
4	90179–30691	TUERCA	2					
5	4XV–23418–00	ARANDELA ESPECIAL	1					
6	90202–30235	ARANDELA DE PLANA	1					
7	90170–28419	TUERCA	1					
8	90201–281U8	ARANDELA PLANA	1					
9	5PW–23435–00	PLATINA SUPERIOR	1					
10	91314–08030	PERNO	2					
11	4XV–2341B–00	EMBLEMA	1					
12	5PW–23818–00	CUBIERTA DE DIRECCION	1					
13	90119–06114	TORNILLO CON ARANDELA	2					

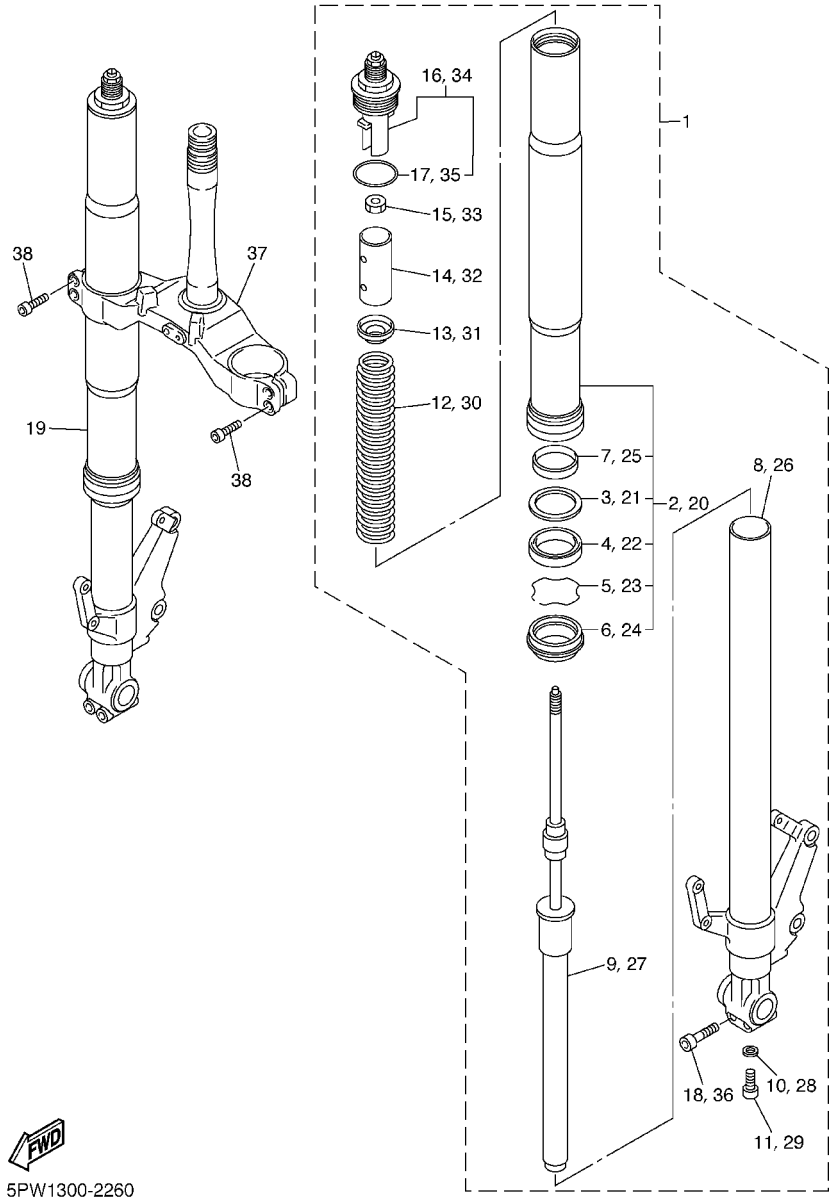

FIG. 26 HORQUILLA DELANTERA

REF. NO.	CODIGO NO.	DESCRIPCION	5PW1					OBSERVACION
1	5PW–23102–10	HORQUILLA DELANTERA COMPL.(MI)	1					UR PARA VRC1, DPBMC
	5PW–23102–00	HORQUILLA DELANTERA COMPL.(MI)	1					UR PARA S3, DPBMC/BWC1
2	5PW–23136–10	.TUBO EXTERIOR (DER.)	1					UR PARA VRC1, DPBMC
	5PW–23136–00	.TUBO EXTERIOR (DER.)	1					UR PARA S3, DPBMC/BWC1
3	5PW–23146–00	..ARANDELA DE SELLO DE ACEITE	1					
4	5PW–23145–00	..RETEN DE ACEITE	1					
5	4V4–23153–L0	..ANILLO DE ENGANCHE	1					
6	4PU–23144–00	..GUARDAPOLVO	1					
7	5PW–23125–00	..METAL CORREDIZO 1	1					
8	5PW–23110–00	.TUBO INTERIOR COMPLETO 1	1					
9	5PW–23170–00	.CILINDRO COMPL DE HORQ DELAN	1					
10	2K8–23158–L0	.EMPAQUE	1					
11	3LC–23181–00	.TORNILLO CABEZAHEXAGONAL	1					
12	5PW–23141–00	.RESORTE HORQUILLA DELANT.	1					
13	4XV–23142–00	.ASIENTO DEL MUELLE SUPERIOR	1					
14	5PW–23118–00	.SEPARADOR	1					
15	3LC–23357–00	.TUERCA	1					
16	5PW–23111–00	.TAPON	1					
17	3XJ–23147–L0	..ARO	1					
18	91314–08040	.PERNO	2					
19	5PW–23103–10	HORQUILLA DELANTERA COMPL.(MD)	1					UR PARA VRC1, DPBMC
	5PW–23103–00	HORQUILLA DELANTERA COMPL.(MD)	1					UR PARA S3, DPBMC/BWC1
20	5PW–23136–10	.TUBO EXTERIOR (DER.)	1					UR PARA VRC1, DPBMC
	5PW–23136–00	.TUBO EXTERIOR (DER.)	1					UR PARA S3, DPBMC/BWC1
21	5PW–23146–00	..ARANDELA DE SELLO DE ACEITE	1					
22	5PW–23145–00	..RETEN DE ACEITE	1					
23	4V4–23153–L0	..ANILLO DE ENGANCHE	1					

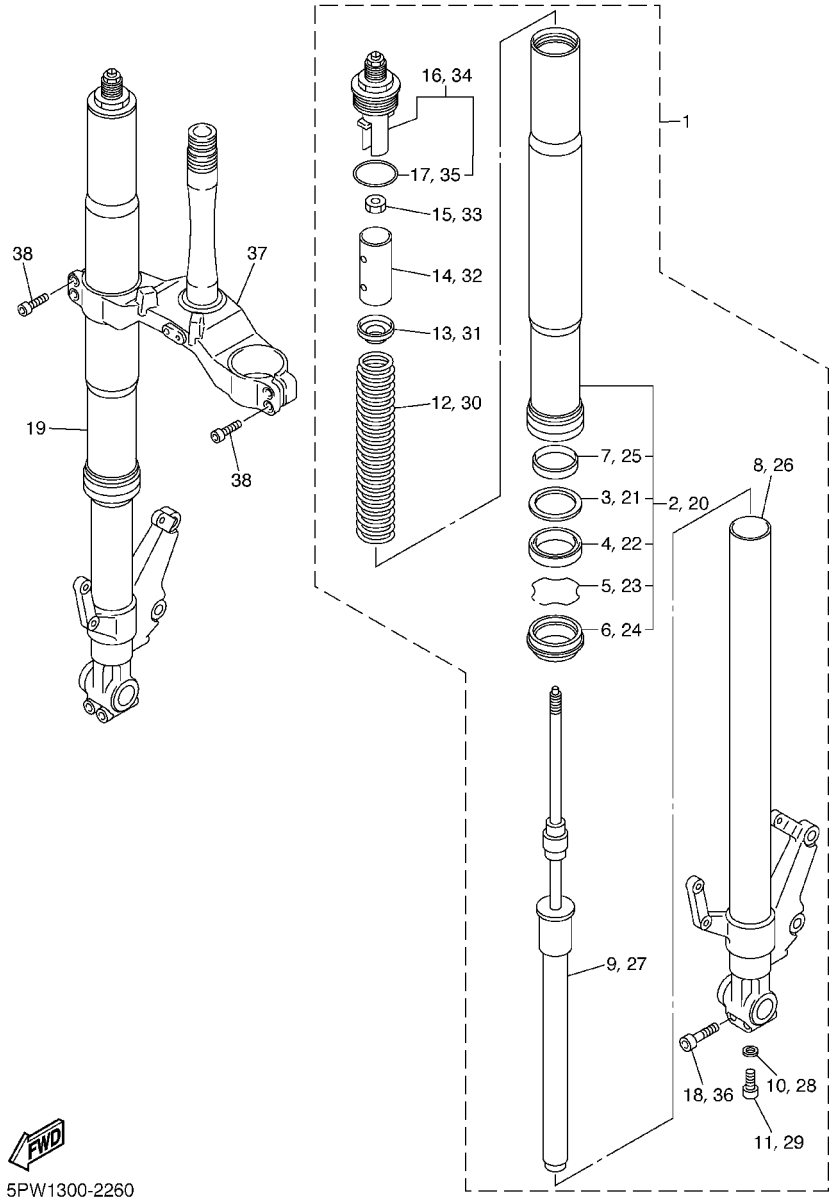

FIG. 26 HORQUILLA DELANTERA

REF. NO.	CODIGO NO.	DESCRIPCION	5PW1					OBSERVACION
24	4PU–23144–00	..GUARDAPOLVO	1					
25	5PW–23125–00	..METAL CORREDIZO 1	1					
26	5PW–23120–00	.TUBO INTERIOR COMPLETO 2	1					
27	5PW–23170–00	.CILINDRO COMPL DE HORQ DELAN	1					
28	2K8–23158–L0	.EMPAQUE	1					
29	3LC–23181–00	.TORNILLO CABEZAHEXAGONAL	1					
30	5PW–23141–00	.RESORTE HORQUILLA DELANT.	1					
31	4XV–23142–00	.ASIENTO DEL MUELLE SUPERIOR	1					
32	5PW–23118–00	.SEPARADOR	1					
33	3LC–23357–00	.TUERCA	1					
34	5PW–23111–00	.TAPON	1					
35	3XJ–23147–L0	..ARO	1					
36	91314–08040	.PERNO	2					
37	5PW–23340–00	PLATINA INFERIOR COMPLETA	1					
38	91314–08030	PERNO	4					

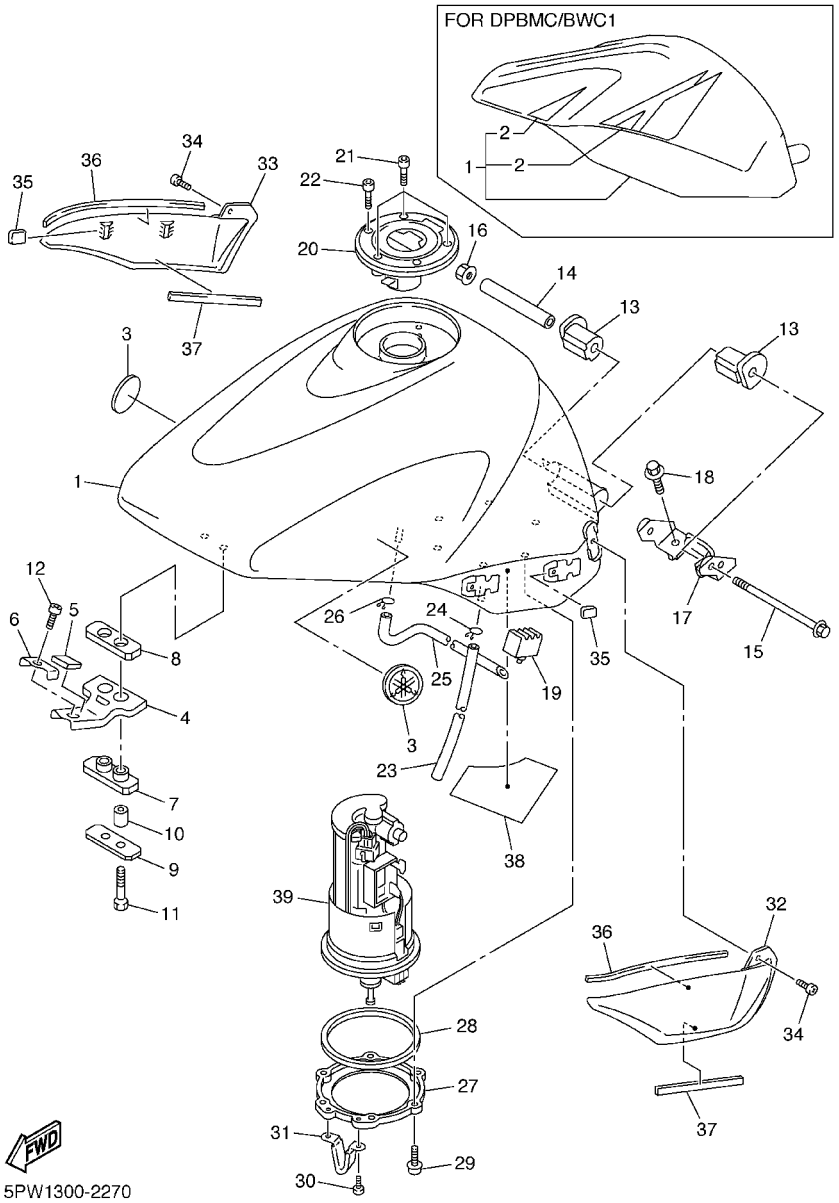

FIG. 27 DEPOSITO DE COMBUSTIBLE

REF. NO.	CODIGO NO.	DESCRIPCION	5PW1					OBSERVACION
1	5PW–YK241–30–P0	DEPOSITO DE COMBUSTIBLE COMP.	1					UR VRC1
	5PW–YK241–30–P1	DEPOSITO DE COMBUSTIBLE COMP.	1					UR DPBMC
	5PW–YK241–M0–P0	DEPOSITO DE COMBUSTIBLE COMP.	1					UR S3
	5PW–Y2410–30–01	DEPOSITO DE COMBUSTIBLE COMP.	1					UR DPBMC/BWC1
2	5PW–24240–00	.JUEGO DE CALCOMANIAS	1					PARA DPBMC/BWC1
3	5PW–2413B–00	EMBLEMA	2					
4	5PW–24191–00	SOPORTE DEPOSITO DE COMBUST.1	1					
5	1AE–2837J–00	AMORTIGUADOR	1					
6	5JJ–24186–00	ARANDELA ESPECIAL	1					
7	2GH–24181–00	AMORTIGUADOR DE MONTAJE	1					
8	2GH–24183–00	AMORTIGUADOR DE MONTAJE 3	1					
9	5JJ–24187–00	ARANDELA ESPECIAL	1					
10	90387–06006	COLLAR	2					
11	90119–06190	TORNILLO CON ARANDELA	2					
12	91314–06016	PERNO	1					
13	4YR–24181–00	AMORTIGUADOR DE MONTAJE	2					
14	90387–06007	COLLAR	1					
15	95817–06110	TUERCA DE REBORDE	1					
16	95607–06200	TUERCA DE AUTO–CIERRE	1					
17	5PW–2413Y–00	SOPORTE ACCESORIO DE DEPOSITO	1					
18	90119–06044	TORNILLO CON ARANDELA	2					
19	4XV–24183–00	AMORTIGUADOR DE MONTAJE 3	2					
20	5JJ–24602–00	TAPON COMPLETO	1					
21	90110–05112	TORNILLO ALLEN	3					
22	91317–05010	PERNO	1					
23	90445–102G7	TUBO (L800)	1					
24	90467–09006	PRESILLA	1					

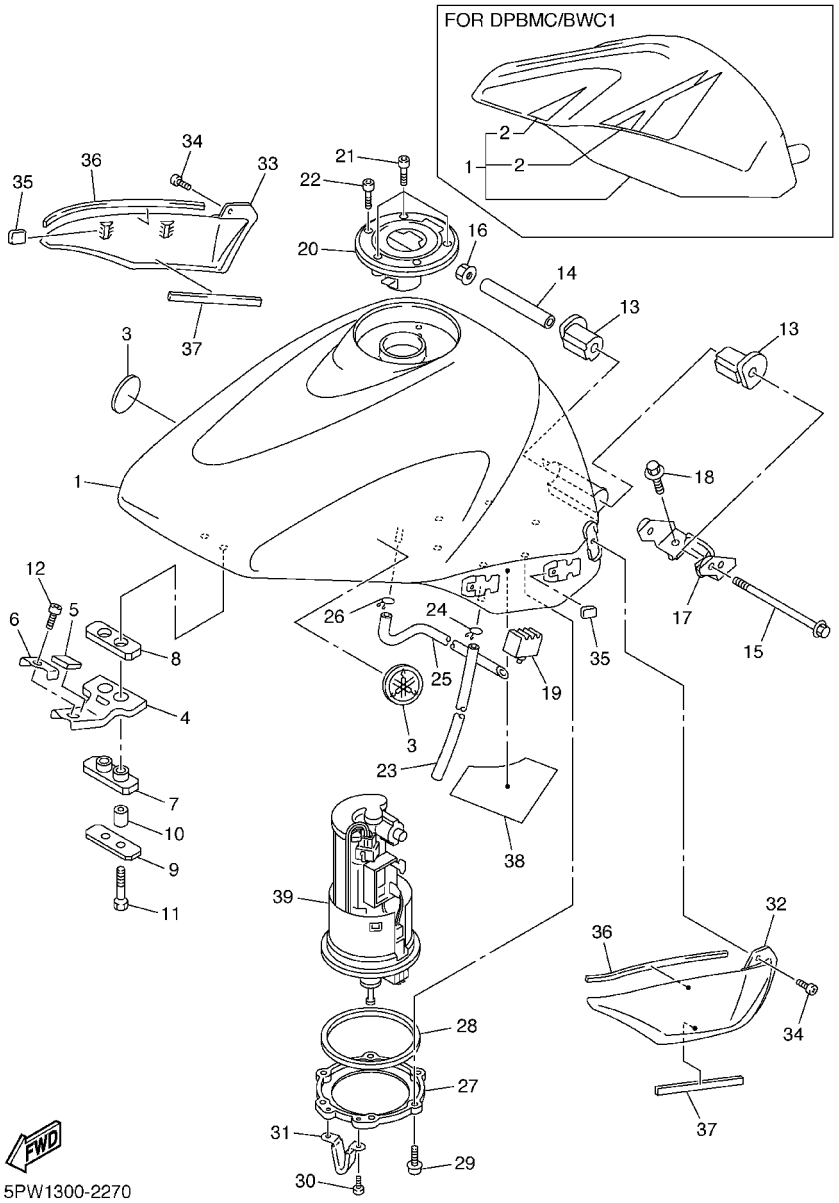

FIG. 27 DEPOSITO DE COMBUSTIBLE

REF. NO.	CODIGO NO.	DESCRIPCION	5PW1					OBSERVACION
25	5PW–24312–00	TUBO 2	1					
26	90467–09006	PRESILLA	1					
27	5PW–24491–00	SOPORTE BOMBA COMBUSTIBLE	1					
28	5JW–24486–00	ANILLO O	1					
29	90110–05014	TORNILLO ALLEN	6					
30	98907–05008	TORNILLO DE LIGAR	2					
31	5PW–24192–00	SOPORTE DE DEPOSITO COMBUST.2	1					
32	5PW–24129–00	CUBIERTA LATERAL 1	1					
33	5PW–24139–00	CUBIERTA LATERAL 2	1					
34	90154–05074	TORNILLO DE LIGAR	2					
35	5PW–2411J–00	AMORTIGUADOR, DE CUBIERTA LAT	4					
36	5PW–2414H–00	EQUILIBRIO, CUBIERTA	2					
37	5PW–2414J–00	EQUILIBRIO, CUBIERTA	2					
38	5PW–24141–00	PROTECTOR DEPOSITO COMBUST.	1					
39	5PW–13907–00	BOMBA DE COMBUSTIBLE COMPLETA	1					

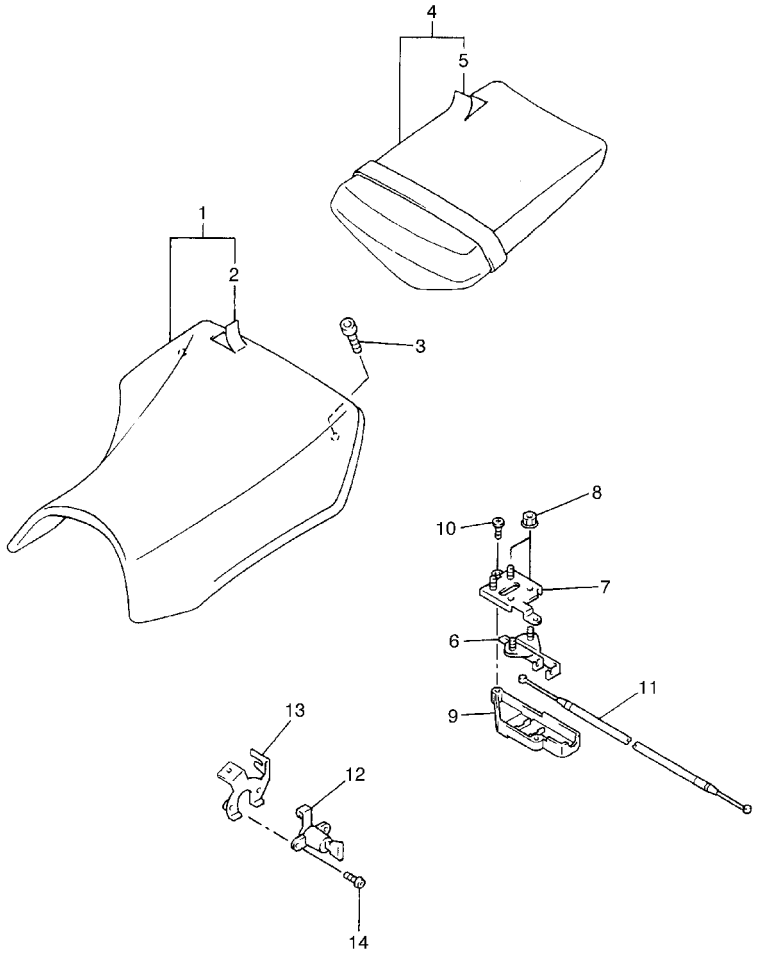

5PW1300-2280

FIG. 28 ASIENTO

REF. NO.	CODIGO NO.	DESCRIPCION	5PW1					OBSERVACION
1	5PW–24710–00	ASIENTO SIMPLE COMPLETO	1					
2	5PW–2470F–00	.FUNDADE SILLIN	1					
3	90110–06258	TORNILLO ALLEN	2					
4	5PW–24750–00	ASIENTO TANDEM COMPLETO	1					
5	5PW–24751–00	.CUBIERTA DE ASIENTO TANDEM	1					
6	4BP–24780–00	TORNILLO CONTROL DE AIRE	1					
7	5JJ–24792–01	PLACA	1					
8	95707–06500	TUERCA DE BRIDA	4					
9	5JJ–2475X–01	CUBIERTA 2	1					
10	97707–40012	TORNILLO ROSCA HEMBRA	2					
11	5JJ–2478E–00	CABLE	1					
12	2TV–W2470–00	ASIENTO DE CIERRE COMPLETO	1					
13	5PW–2117K–00	SOPORTE DE CERRADURA	1					
14	90149–06308	TORNILLO DE REGLAJE	2					

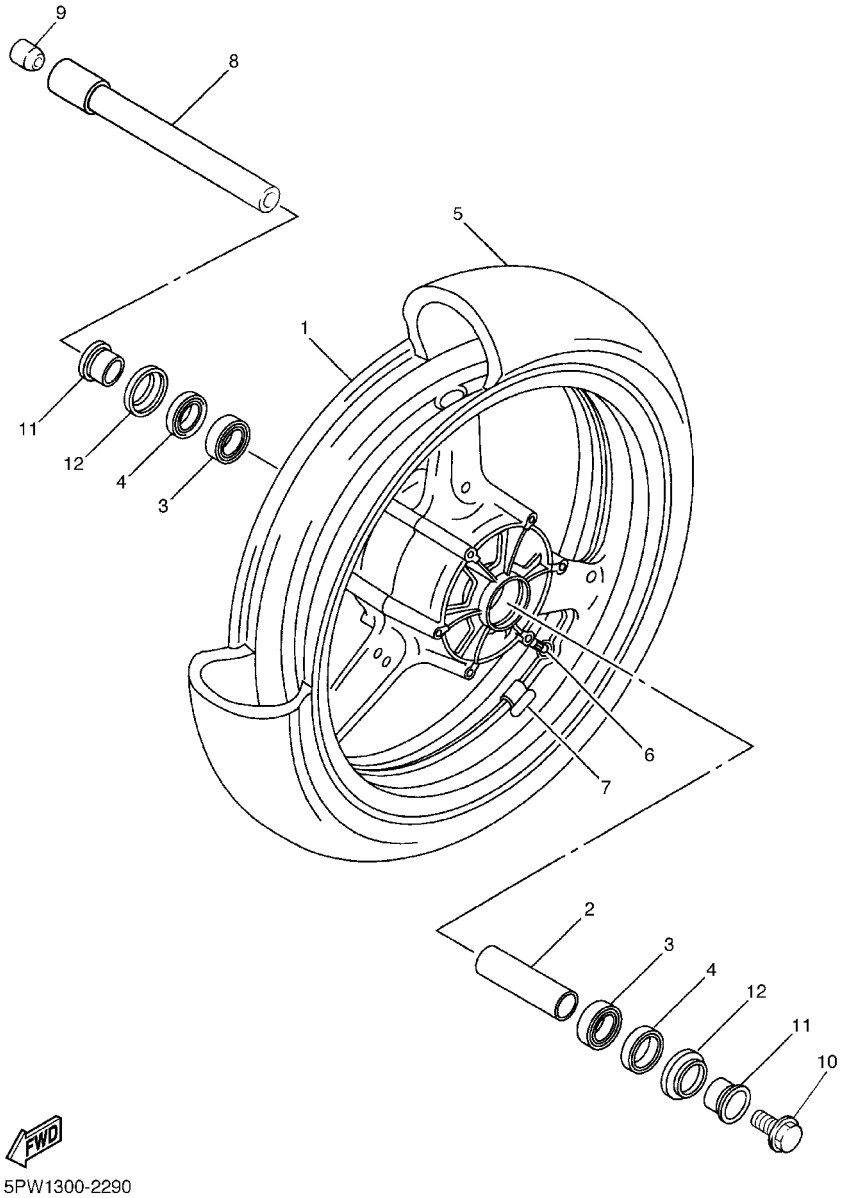

FIG. 29 RUEDA DELANTERA

REF. NO.	CODIGO NO.	DESCRIPCION	5PW1					OBSERVACION
1	5PW–25168–00–33	RUEDA FUNDIDA DELANTERA	1					YB
2	4XV–25117–00	ESPACIADOR DE COJINETE	1					
3	93306–00420	COJINETE	2					
4	93106–28043	SELLO ACEITE	2					
5	94112–17054	NEUMATICO (120/70 ZR17M/C 58W D208F)	1					UR DUNLOP
	*	NEUMATICO (120/70 ZR17M/C 58W Pilot SPORT G)	1					UR LM MICHELIN
6	93900–00030	VALVULA DE ARO	1					
7	5MT–25398–00	BALANCEADOR DE RUEDA(10G)	1					UN
	5MT–25398–10	BALANCEADOR DE RUEDA (20G)	1					UN
	5MT–25398–20	BALANCEADOR DE RUEDA (30G)	1					UN
8	5PW–25181–00	EJE DE LA RUEDA	1					
9	5PW–25188–00	TAPA	1					
10	90105–14002	TORNILLO	1					
11	4XV–25186–00	COLLAR DE RUEDA	2					
12	4XV–25118–00	CUBIERTA DE MASA PARA POLVO	2					

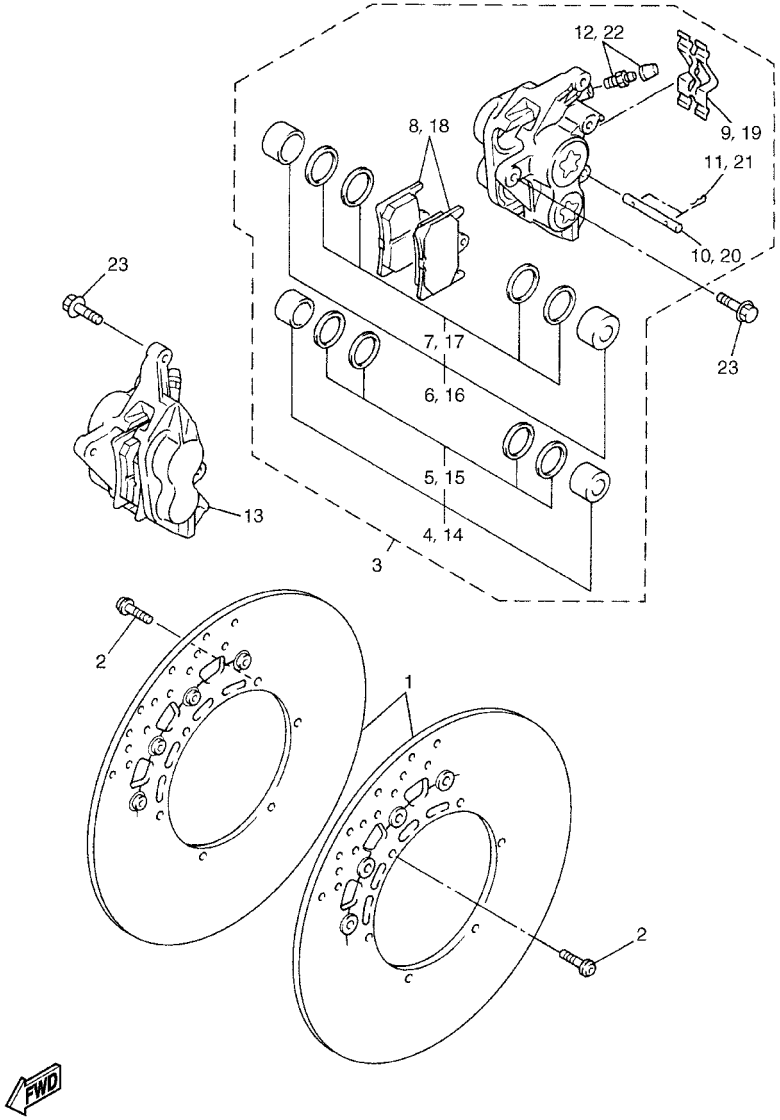

5PW1300-2300

FIG. 30 CALIBRE FRENO DELANTERA

REF. NO.	CODIGO NO.	DESCRIPCION	5PW1					OBSERVACION
1	5JJ–2581T–10	DISCO DE FRENO	2					
2	90109–064G6	PERNO	12					
3	5PW–2580T–00	CALIBRE COMPLETO (IZQUIERDO)	1					
4	5PW–W0057–00	.PISTON COMPLETO PINZA	1					
5	5PW–W0047–00	..JUEGO DE RETENES DE PINZA	1					
6	5PW–W0057–10	.PISTON COMPLETO PINZA	1					
7	5PW–W0047–10	..JUEGO DE RETENES DE PINZA	1					
8	5PW–W0045–00	.JUEGO DE COJIN DE FRENO	1					
9	4SV–25919–00	.SOPORTE DE PASTILLAS	1					
10	4SV–25924–00	.PASADOR	1					
11	3GM–25925–00	.PRESILLA	2					
12	1J3–W0048–00	.CJTO TORNILLO DE PURGA	1					
13	5PW–2580U–00	CALIBRE COMPLETO (DERECO)	1					
14	5PW–W0057–00	.PISTON COMPLETO PINZA	1					
15	5PW–W0047–00	..JUEGO DE RETENES DE PINZA	1					
16	5PW–W0057–10	.PISTON COMPLETO PINZA	1					
17	5PW–W0047–10	..JUEGO DE RETENES DE PINZA	1					
18	5PW–W0045–00	.JUEGO DE COJIN DE FRENO	1					
19	4SV–25919–00	.SOPORTE DE PASTILLAS	1					
20	4SV–25924–00	.PASADOR	1					
21	3GM–25925–00	.PRESILLA	2					
22	1J3–W0048–00	.CJTO TORNILLO DE PURGA	1					
23	90105–105A7	TORNILLO	4					

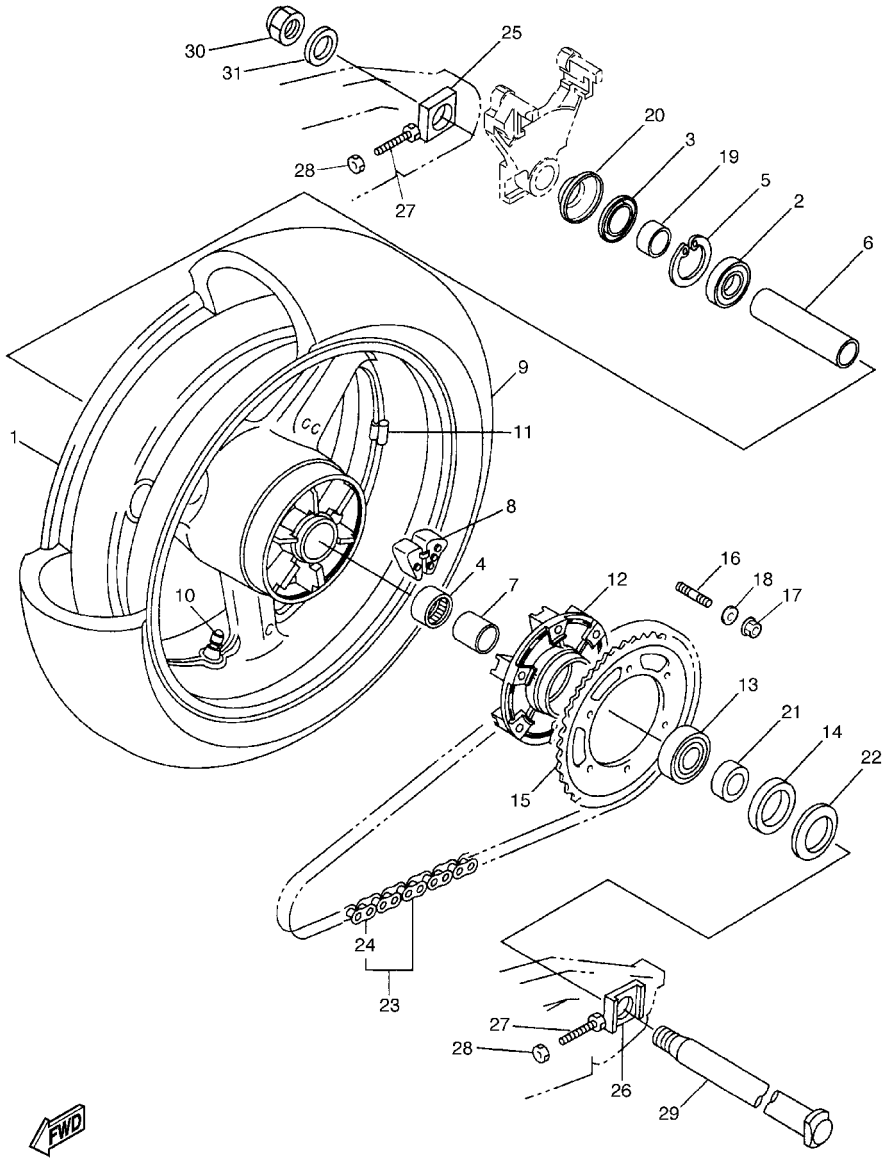

5PW1300-2310

FIG. 31 RUEDA TRASERA

REF. NO.	CODIGO NO.	DESCRIPCION	5PW1					OBSERVACION
1	5PW–25338–01–33	RUEDA FUNDIDA TRASERA	1					YB
2	93306–20531	COJINETE	1					
3	93106–40013	SELLO ACEITE	1					
4	93317–43580	COJINETE	1					
5	93420–61M07	BOLA	1					
6	5PW–25317–00	ESPACIADOR DE COJINETE	1					
7	4XV–25383–00	COLLAR DE RUEDA	1					
8	5PW–25364–00	AMORTIGUADOR	6					
9	94119–17019	NEUMATICO (190/50 ZR17M/C 73W D208)	1					UR DUNLOP
	*	NEUMATICO (190/50 ZR17M/C 73W Pilot SPORT G)	1					UR LM MICHELIN
10	93900–00030	VALVULA DE ARO	1					
11	5MT–25398–00	BALANCEADOR DE RUEDA(10G)	1					UN
	5MT–25398–10	BALANCEADOR DE RUEDA (20G)	1					UN
	5MT–25398–20	BALANCEADOR DE RUEDA (30G)	1					UN
12	5PW–25366–00	EMBRAGUE DE MASA	1					
13	93306–20531	COJINETE	1					
14	93106–40013	SELLO ACEITE	1					
15	4XV–25443–21	CORONA (43T)	1					
16	90116–10485	ESPARRAGO	6					
17	90185–10009	TUERCA AUTOBLOCANTE	6					
18	90201–10021	ARANDELA PLANA	6					
19	5PW–25377–00	COLLAR DE RUEDA	1					
20	5PW–25367–00	CUBIERTA DE MASA PARA POLVO	1					
21	4XV–25376–00	COLLAR DE RUEDA	1					
22	5JJ–25367–00	CUBIERTA DE MASA PARA POLVO	1					
23	9Y582–05113	CADENA (DID50VA8–113LL)	1					
24	94682–05031	.CONECTOR DE CADENA	1					

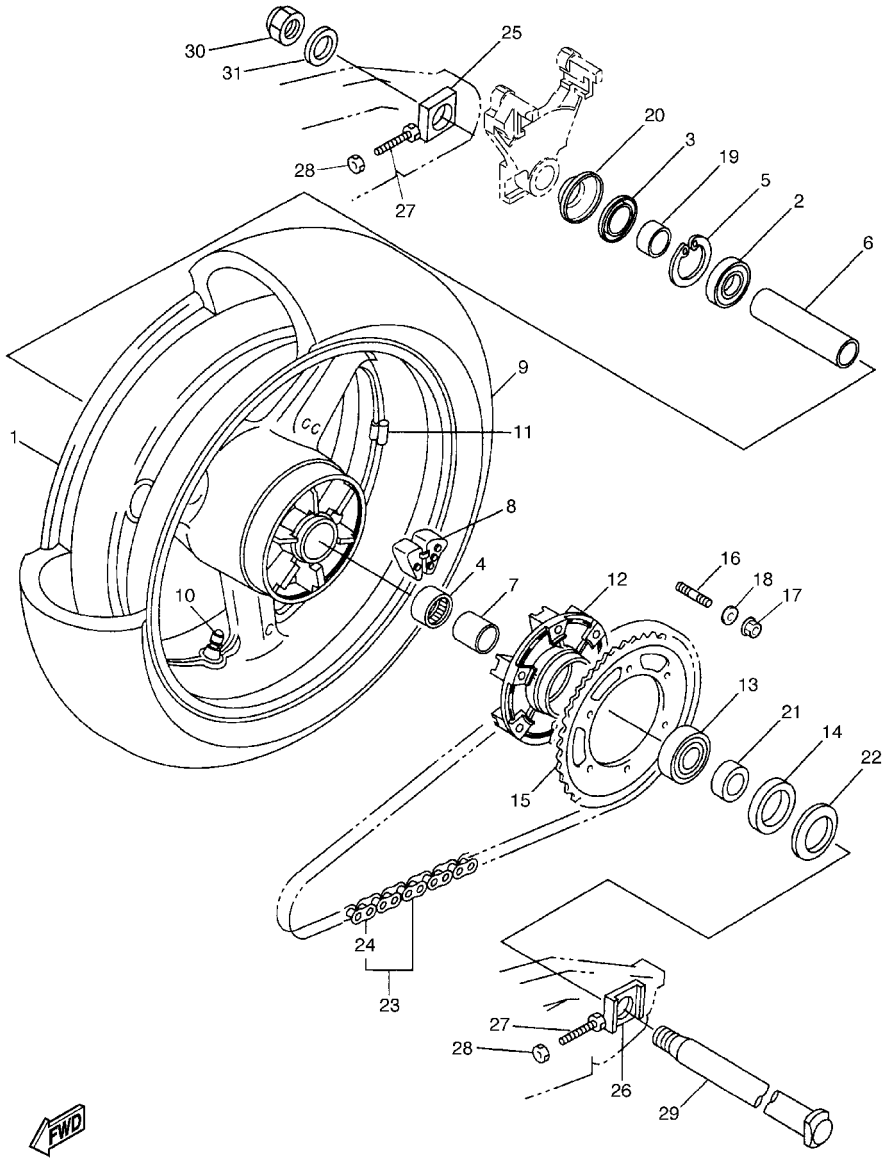

5PW1300-2310

FIG. 31 RUEDA TRASERA

REF. NO.	CODIGO NO.	DESCRIPCION	5PW1					OBSERVACION
25	4XV–25388–00	TIRADOR DE CADENA 1	1					
26	4XV–25389–00	TIRADOR DE CADENA 2	1					
27	90101–08766	TORNILLO	2					
28	95307–08600	TUERCA	2					
29	4XV–25381–00	EJE DE RUEDA	1					
30	90185–24165	TUERCA AUTOBLOCANTE	1					
31	90201–257R5	ARANDELA PLANA	1					

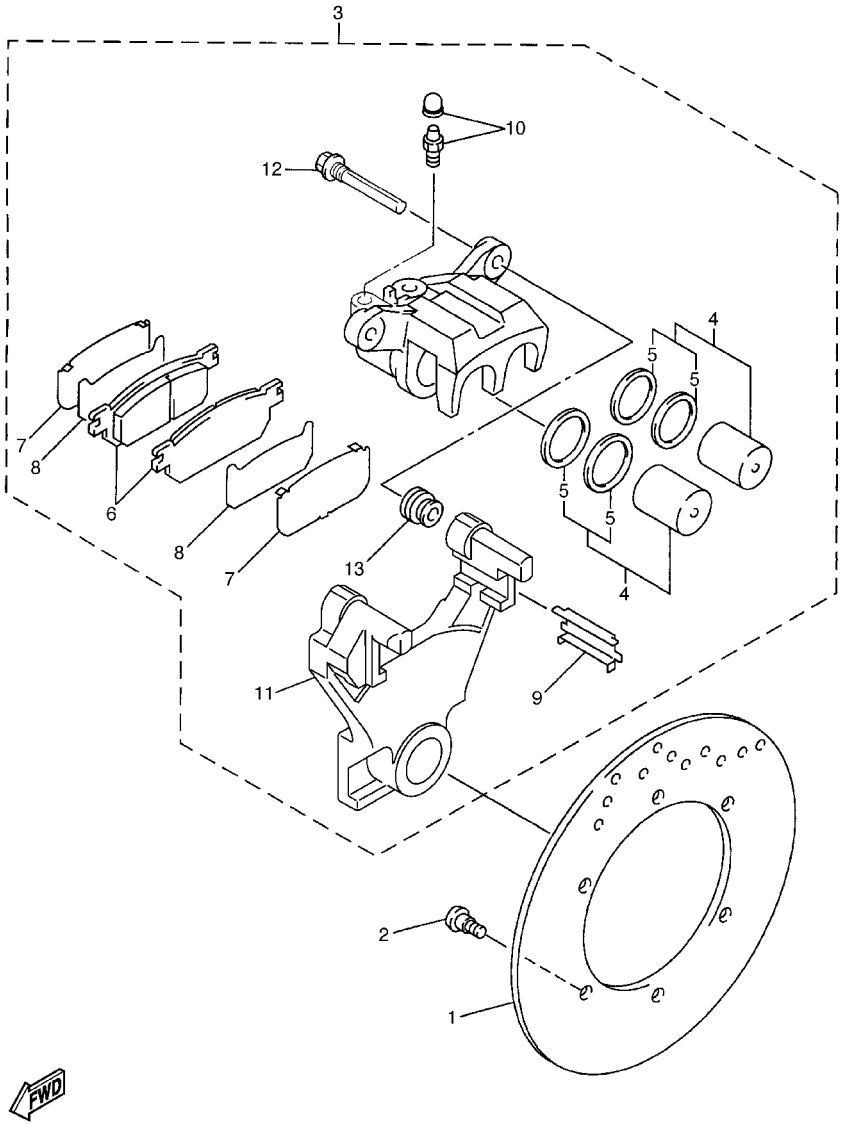

5PW1300-2320

FIG. 32 CALIBRE FRENO TRASERA

REF. NO.	CODIGO NO.	DESCRIPCION	5PW1					OBSERVACION
1	5EB–2582W–00	DISCO DE FRENO TRASEROS 2	1					
2	90109–064G6	PERNO	6					
3	5PW–2580W–00	CALIBRE COMPLETO TRASEROS 2	1					
4	4JG–W0057–00	.PISTON COMPLETO PINZA	1					
5	4JG–W0047–00	..JUEGO DE RETENES DE PINZA	1					
6	5PW–W0046–50	.JUEGO DE PASTILLAS DE FRENO 2	1					
7	5GM–25828–00	.CUNA DE CALIBRE	2					
8	5EB–25828–00	.CUNA DE CALIBRE	2					
9	4TT–25919–00	.SOPORTE DE PASTILLAS	2					
10	51L–W0048–00	.CJTO TORNILLO DE PURGA	1					
11	5PW–25921–00	.MENSULA DE SOPORTE	1					
12	5PW–25914–00	.PASADOR	2					
13	4TT–25937–00	.FUNDA	2					

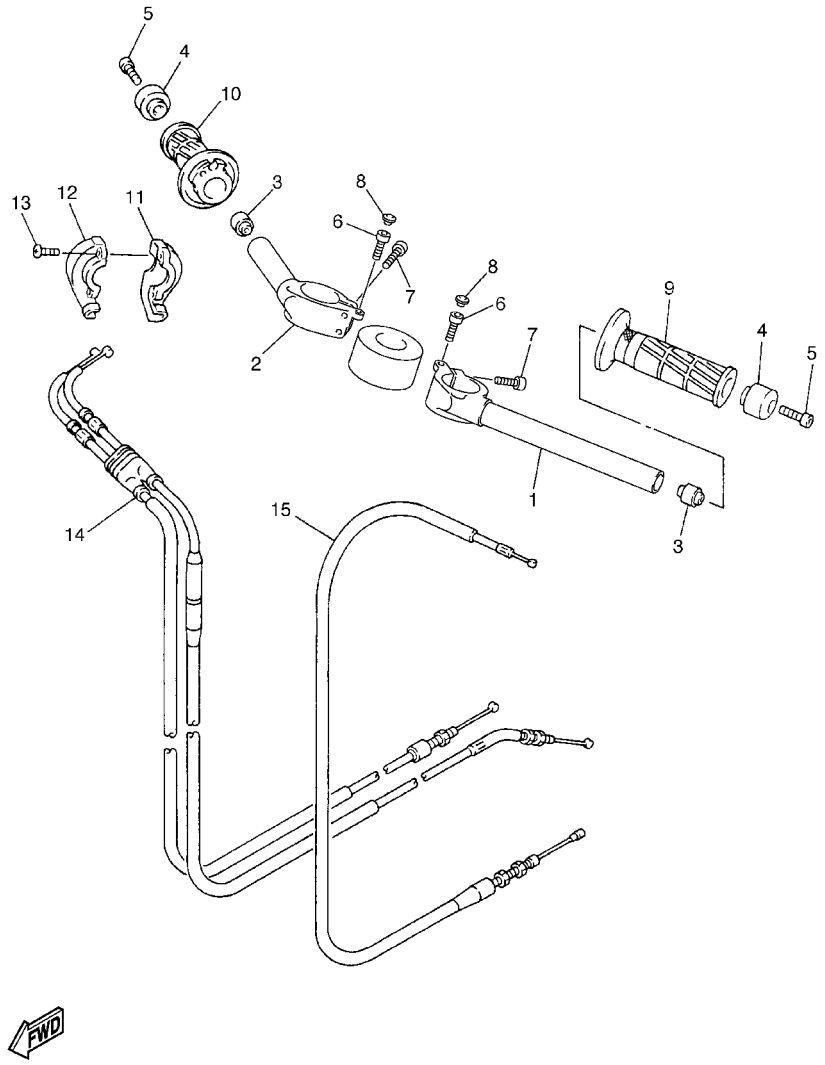

5PW1300-2330

FIG. 33 MANUBRIO. CABLE

REF. NO.	CODIGO NO.	DESCRIPCION	5PW1					OBSERVACION
1	5PW–26121–00	MANUBRIO (MI)	1					
2	5PW–26122–00	MANUBRIO (MD)	1					
3	4XV–23434–00	SOPORTE DE AMORTIGUADOR	2					
4	5PW–26246–00	EXTREMO DE EMPUNADURA	2					
5	91317–06025	PERNO	2					
6	91317–06025	PERNO	2					
7	91314–06025	PERNO	4					
8	2H9–23469–00	TAPA DE PERNO	2					
9	4YR–26241–01	EMPUNADURA	1					
10	4YR–26240–01	EMPUNADURA COMPLETA	1					
11	3XW–26281–01	TAPA DE EMPUNADURA SUPERIOR	1					
12	3XW–26282–01	TAPA DE EMPUNADURA INFERIOR	1					
13	91317–05035	PERNO	2					
14	5PW–26302–00	CABLE DE ACELERADOR COMPLETO	1					
15	5PW–26335–00	CABLE DE EMBRAGUE	1					

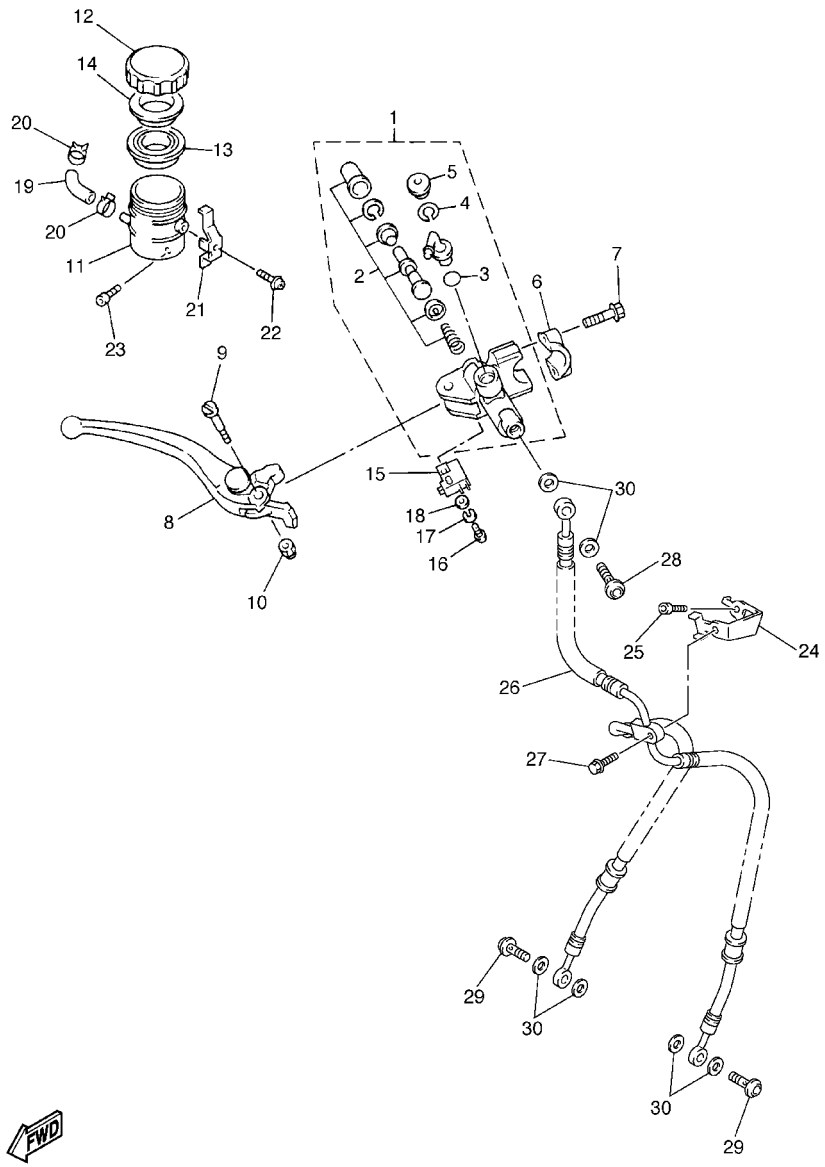

5PW1300-2340

FIG. 34 CILINDRO MAESTRO DELANTERO

REF. NO.	CODIGO NO.	DESCRIPCION	5PW1					OBSERVACION
1	4SV–W2587–10	CILINDRO MAESTRO SUB COMPLET	1					
2	4SV–W0041–00	.JUEGO DE CILINDRO MAESTRO	1					
3	93210–15620	.ANILLO O	1					
4	2VN–25866–00	.PRESILLA REDONDA	1					
5	3FV–2589A–00	.CUBIERTA PARA POLVO	1					
6	56A–25867–00	SOPORTE DE CILINDRO MAESTRO	1					
7	91316–06020	PERNO	2					
8	5PW–83922–00	PALANCA 2	1					
9	3FV–2589F–00	PERNO DE PALANCA	1					
10	95606–06100	PERNO DE PUNTAL	1					
11	3FV–25894–00	TANQUE DE RESERVA	1					
12	3GM–25852–50	TAPA DE TANQUE DE RESERVA	1					
13	3FV–25854–00	DIAFRAGMA TANQUE RESERVA	1					
14	2J2–25855–50	BUJE DE DIAFRAGMA	1					
15	4HM–83980–00	INTERRUP.PARADA DELANTERO	1					
16	98502–04012	TORNILLO DE CABEZA CON PLANA	1					
17	92902–04100	ARANDELA	1					
18	92902–04600	ARANDELA	1					
19	5PW–2582F–01	TUBO	1					
20	3PA–24356–00	PRESILLA DE TUBO 1	2					
21	3FV–2589G–00	SOPORTE	1					
22	3GM–2589H–00	TORNILLO	1					
23	91317–06012	PERNO	1					
24	5PW–25887–00	SOPORTE DE MANGUERA FRENO	1					
25	91317–06012	PERNO	1					
26	5PW–25872–00	MANGUERA DE FRENO 1	1					
27	95027–06020	PERNO, DE BRIDA	1					

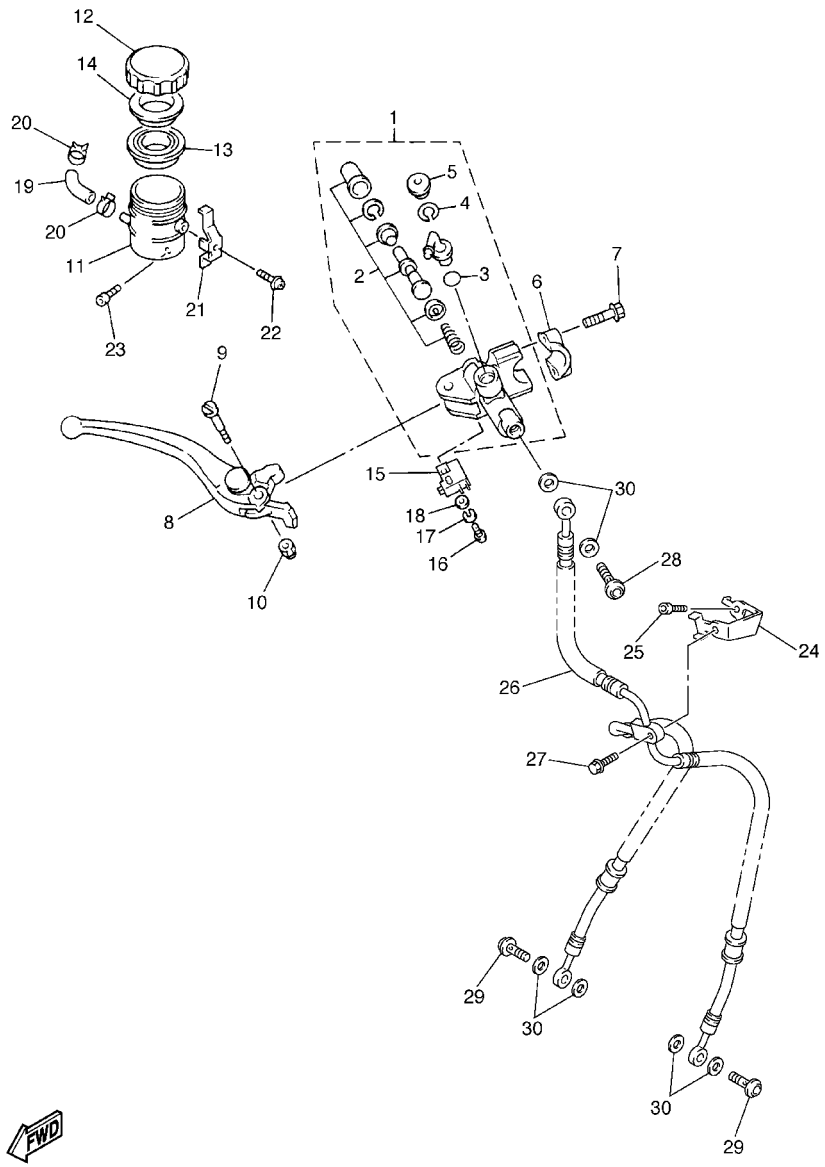

5PW1300-2340

FIG. 34 CILINDRO MAESTRO DELANTERO

REF. NO.	CODIGO NO.	DESCRIPCION	5PW1					OBSERVACION
28	90401–10172	PERNO DE UNION	1					
29	90401–10172	PERNO DE UNION	2					
30	90201–10118	ARANDELA PLANA	6					

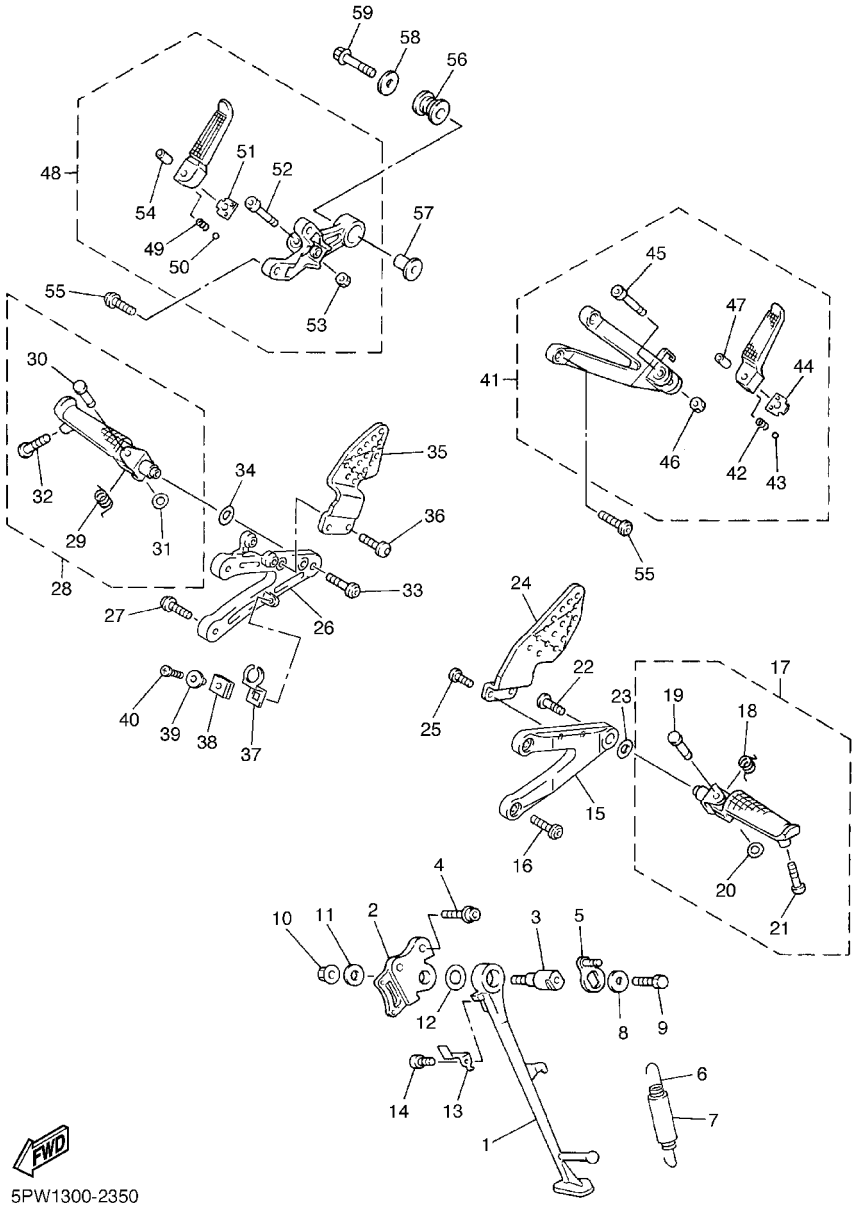

5PW1300-2350

FIG. 35 SOPORTE. APOYAPIE

REF. NO.	CODIGO NO.	DESCRIPCION	5PW1					OBSERVACION
1	5PW–27311–00	PUNTAL LATERAL	1					
2	5JJ–27321–00	SOPORTE DE PUNTAL LATERAL	1					
3	4NX–27351–00	GUIA DE PUNTAL LATERAL	1					
4	90109–10002	PERNO	2					
5	5PW–27352–00	GANCHO DE PUNTAL LATERAL	1					
6	90506–18003	RESORTE DE TENSION	1					
7	90445–19002	TUBO (L60)	1					
8	90201–081R9	ARANDELA PLANA	1					
9	90101–08662	TORNILLO	1					
10	95607–10200	TUERCA DE AUTO–CIERRE	1					
11	90201–101J1	ARANDELA PLANA	1					
12	90201–146F9	ARANDELA PLANA	1					
13	5JJ–27315–00	CONEXION DE PUNTAL LATERAL	1					
14	90110–06226	TORNILLO ALLEN	1					
15	5PW–27442–00	SOPORTE 2	1					
16	90109–085G6	PERNO	2					
17	5JJ–27410–01	APOYAPIE DELANTERO (MI)	1					
18	90508–18134	.RESORTE DE TORSION	1					
19	90243–08029	.PASADOR	1					
20	90201–06042	.ARANDELA PLANA	1					
21	90109–083E0	.PERNO	1					
22	90149–08296	TORNILLO DE REGLAJE	1					
23	90201–13008	ARANDELA PLANA	1					
24	5JJ–27445–00	PLACE 1	1					
25	90149–06233	TORNILLO DE REGLAJE	2					
26	5PW–27443–00	SOPORTE 3	1					
27	90109–085G6	PERNO	2					

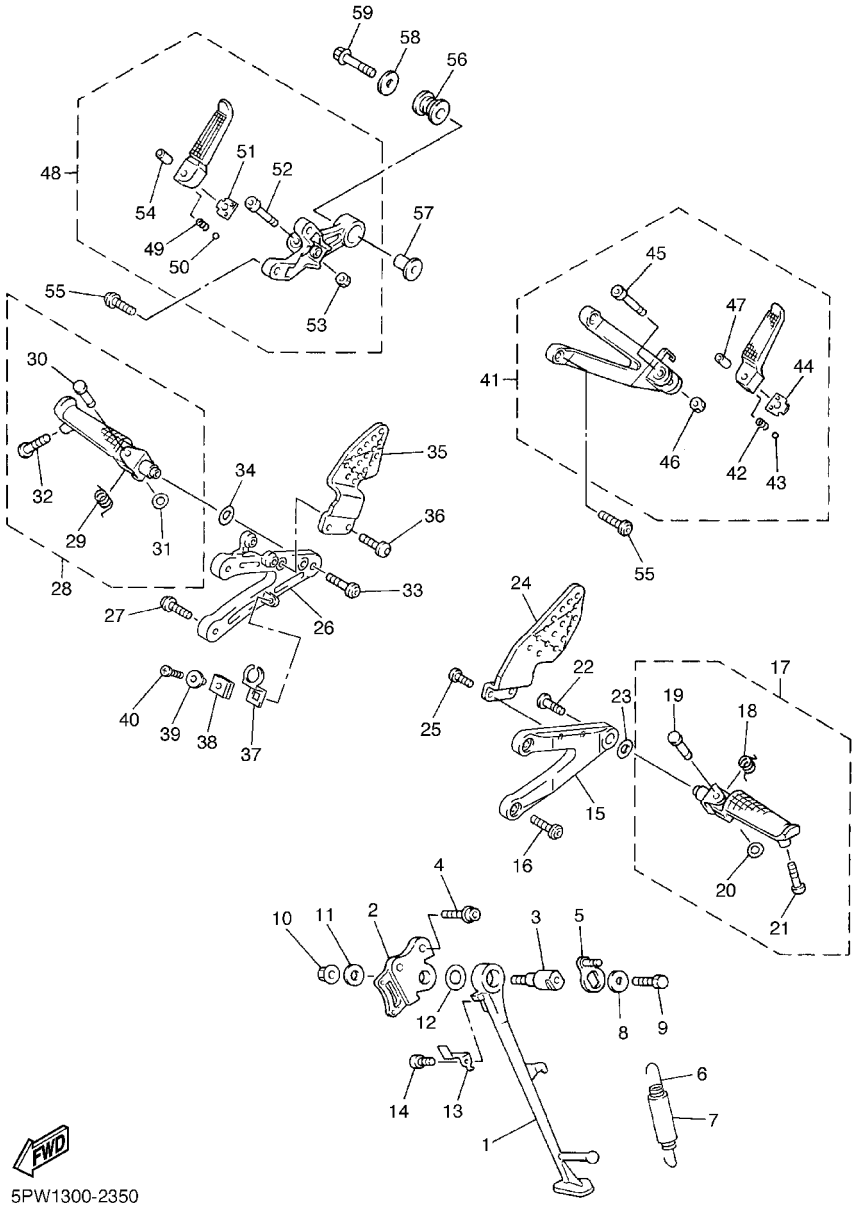

5PW1300-2350

FIG. 35 SOPORTE. APOYAPIE

REF. NO.	CODIGO NO.	DESCRIPCION	5PW1					OBSERVACION
28	5JJ–27420–01	APOYAPIE DELANTERO (MD)	1					
29	90508–18135	.RESORTE DE TORSION	1					
30	90243–08029	.PASADOR	1					
31	90201–06042	.ARANDELA PLANA	1					
32	90109–083E0	.PERNO	1					
33	90149–08296	TORNILLO DE REGLAJE	1					
34	90201–13008	ARANDELA PLANA	1					
35	5JJ–27446–00	PLACE 2	1					
36	90149–06233	TORNILLO DE REGLAJE	2					
37	5EB–2144G–00	SOPORTE DE INTERRUPTOR	1					
38	90480–12607	TAPON	1					
39	90387–06023	COLLAR	1					
40	90159–06150	TORNILLO CON VALONA	1					
41	5JJ–27430–00	APOYAPIE POSTERIOR COMPLETO 1	1					
42	90501–12743	.RESORTE DE COMPRESION	1					
43	93501–04011	.BOLA	1					
44	5JJ–27437–00	.ARANDELA ESPECIAL	1					
45	91314–06035	.PERNO	1					
46	95604–06200	.TUERCA DE AUTO–CIERRE	1					
47	90387–06697	.COLLAR	1					
48	5PW–27440–00	APOYAPIE POSTERIOR COMPLETO 2	1					
49	90501–12743	.RESORTE DE COMPRESION	1					
50	93501–04011	.BOLA	1					
51	5JJ–27437–00	.ARANDELA ESPECIAL	1					
52	91314–06035	.PERNO	1					
53	95604–06200	.TUERCA DE AUTO–CIERRE	1					
54	90387–06697	.COLLAR	1					

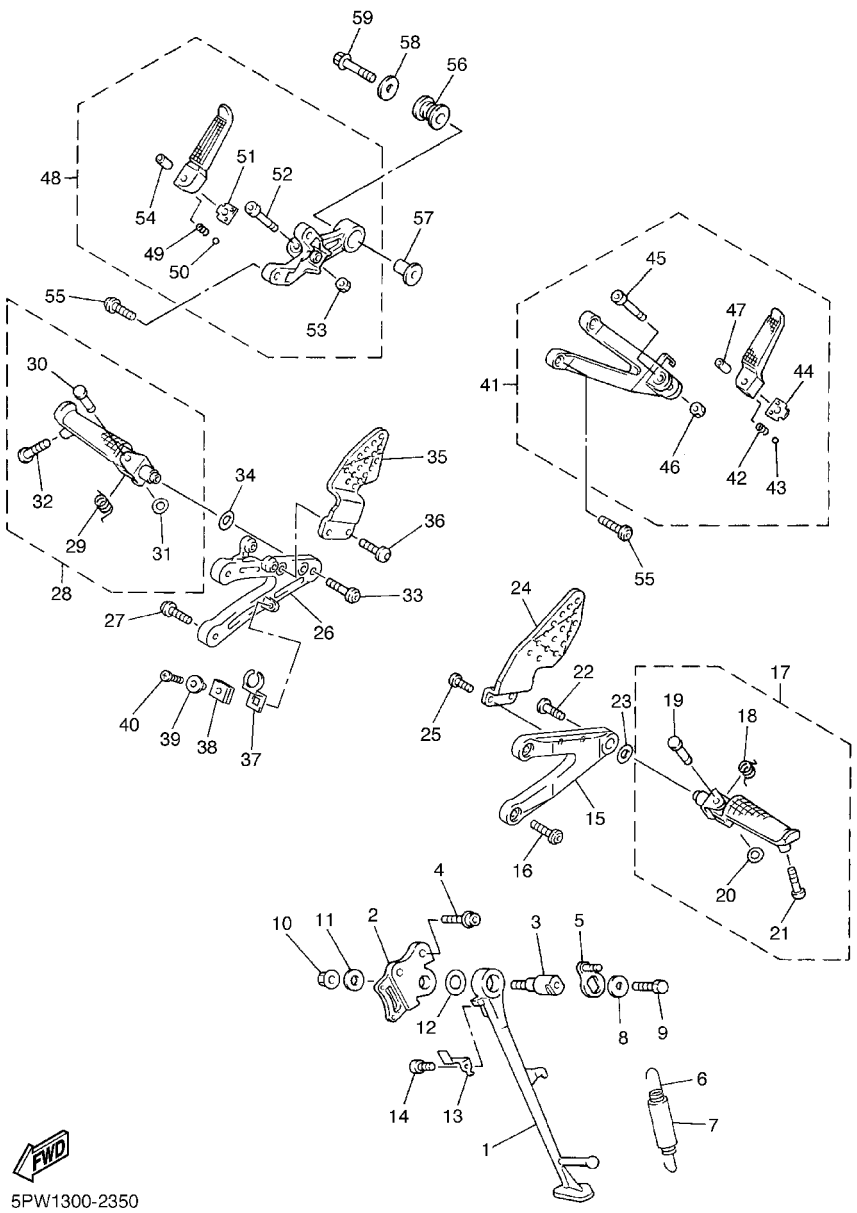

5PW1300-2350

FIG. 35 SOPORTE. APOYAPIE

REF. NO.	CODIGO NO.	DESCRIPCION	5PW1					OBSERVACION
55	90109–085G6	PERNO	4					
56	36Y–27424–00	AMORTIGUADOR DE APOYAPIE 2	1					
57	90387–10001	COLLAR	1					
58	90201–10669	ARANDELA PLANA	1					
59	90105–10022	TORNILLO	1					

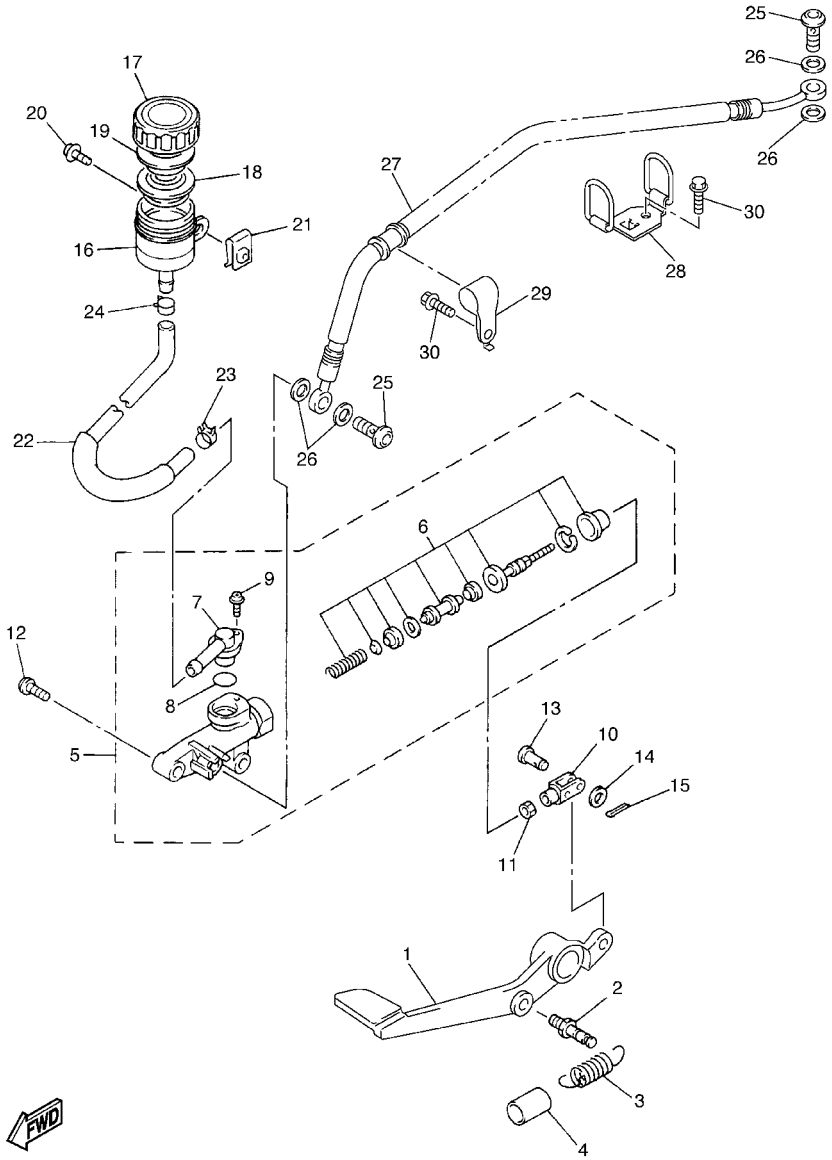

5PW1300-2360

FIG. 36 CILINDRO MAESTRO TRASERO

REF. NO.	CODIGO NO.	DESCRIPCION	5PW1					OBSERVACION
1	5PW–27211–00	PEDAL DE FRENO	1					
2	5JJ–27813–00	PASADOR MANIVELA DE PEDAL	1					
3	90506–20377	RESORTE DE TENSION	1					
4	90446–17346	TUBO RESEIRADERO	1					
5	3TU–2583V–01	CILINDRO, MAESTRO TRASERO	1					
6	3TU–W0042–51	.JUEGO DE CILINDRO MAESTRO	1					
7	3LN–2582A–00	.CONECTOR	1					
8	3LN–2585F–00	.ANILLO O	1					
9	3LN–2585H–00	.TORNILLO	1					
10	4XV–27222–01	UNION	1					
11	95304–08700	TUERCA	1					
12	90109–06013	PERNO	2					
13	91701–06018	PASADOR DE ABRAZADERA	1					
14	92907–06200	ARANDELA	1					
15	91401–16012	PASADOR DE CHAVETA	1					
16	5JJ–25894–00	TANQUE DE RESERVA	1					
17	3XP–25852–50	TAPA DE TANQUE DE RESERVA	1					
18	2VN–25854–00	DIAFRAGMA TANQUE RESERVA	1					
19	2VN–25855–00	BUJE DE DIAFRAGMA	1					
20	90159–06056	TORNILLO CON VALONA	1					
21	90183–06053	TUERCA DE RESORTE	1					
22	5PW–25895–00	MANGUERA DE TANQUE DE RESERVA	1					
23	90467–14057	PRESILLA	1					
24	90467–12191	PRESILLA	1					
25	90401–10172	PERNO DE UNION	2					
26	90201–10118	ARANDELA PLANA	4					
27	5PW–25874–00	MANGUERA DE FRENO	1					

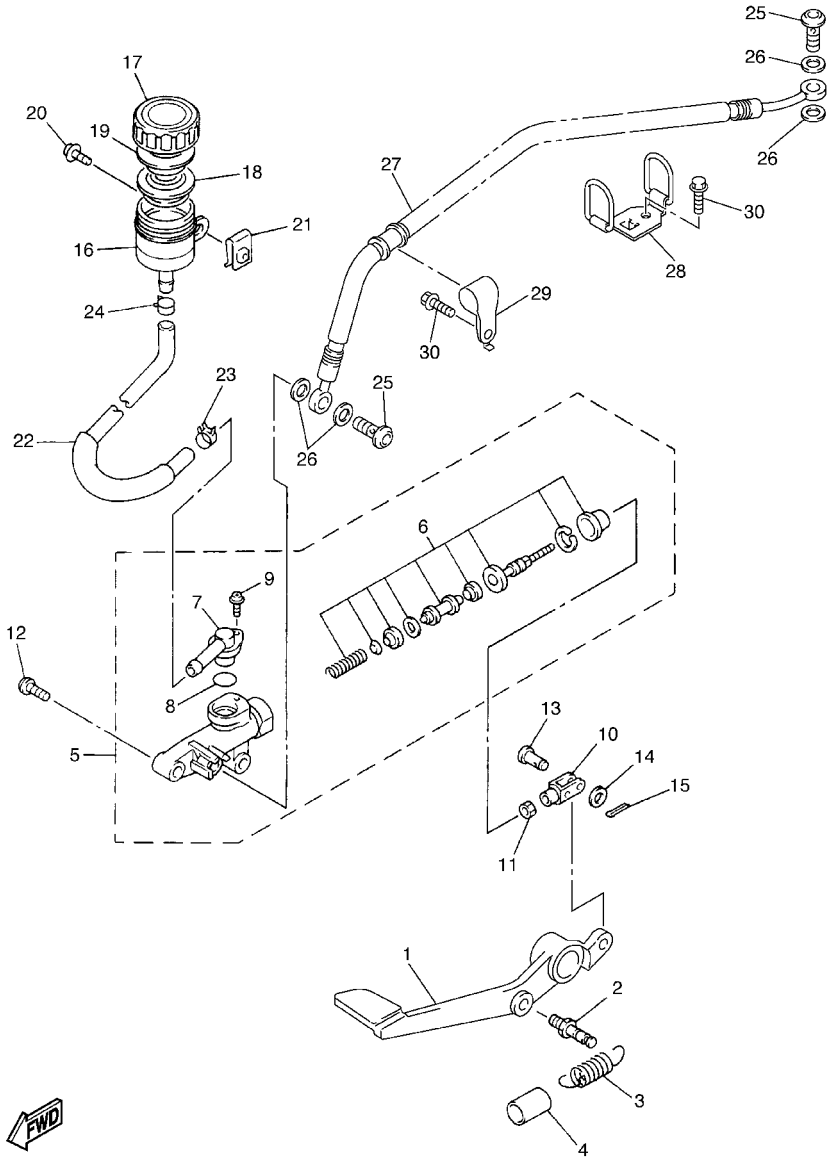

5PW1300-2360

FIG. 36 CILINDRO MAESTRO TRASERO

REF. NO.	CODIGO NO.	DESCRIPCION	5PW1					OBSERVACION
28	5PW–25886–00	SOPORTE DE MANGUERA FRENO	1					
29	5EB–25886–01	SOPORTE DE MANGUERA FRENO	1					
30	90105–06718	TORNILLO	2					

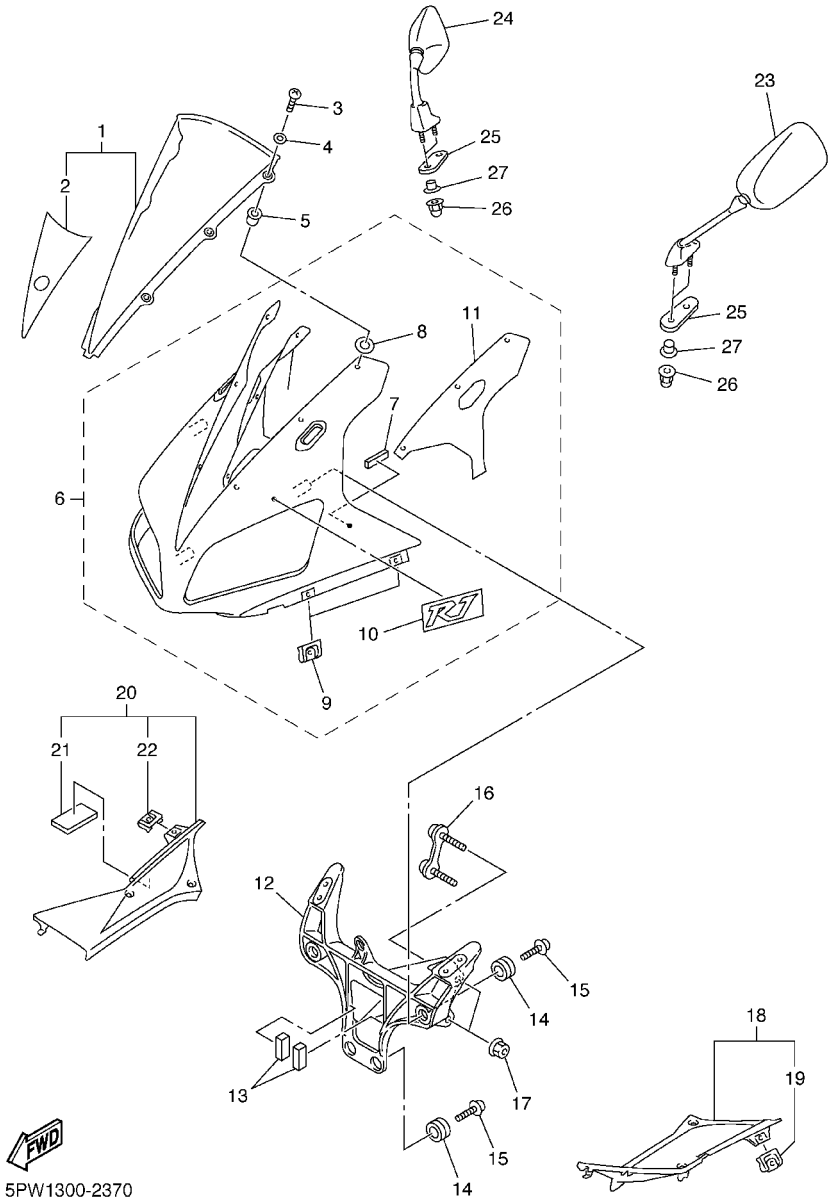

FIG. 37 BOVEDA 1

REF. NO.	CODIGO NO.	DESCRIPCION	5PW1					OBSERVACION
1	5PW–Y2881–00	PARABRISA	1					
2	5PW–2832P–10	.CALCOMANIA, DE BOVEDA 18	1					
3	90150–05024	TORNILLO CABEZA REDONDA	6					
4	90202–05123	ARANDELA DE PLANA	6					
5	90179–05523	TUERCA	6					
6	5PW–Y283G–00–P0	CARROCERIA DELANT SUP 1	1					UR VRC1
	5PW–Y283G–10–P1	CARROCERIA DELANT SUP 1	1					UR DPBMC, DPBMC/BWC1
	5PW–Y283G–20–P2	CARROCERIA DELANT SUP 1	1					UR S3
7	1HX–27415–00	.PLACA DE APOYAPIE	2					
8	5JJ–2834W–00	.PROTECTOR 2	6					
9	5PW–2177L–00	.PLACA DE RESORTE	4					
10	5PW–28315–00	.EMBLEMA	1					UR PARA VRC1
	5PW–28315–10	.EMBLEMA	1					UR PARA DPBMC, DPBMC/BWC1
	5PW–28315–20	.EMBLEMA	1					UR PARA S3
11	5PW–283A0–00	.JUEGO DE CALCOMANIAS	1					
12	5PW–28356–00	SOPORTE 1	1					
13	5DM–28371–00	AMORTIGUADOR	2					
14	4XV–83513–00	AMORTIGUADOR	4					
15	90164–05014	TORNILLO ROSCA HEMBRA	4					
16	4XV–28336–00	PLATO	1					
17	95607–08200	TUERCA DE AUTO–CIERRE	2					
18	5PW–Y283L–00–P0	PANEL DE CONSOLA	1					MBL2
19	5PW–2177L–00	.PLACA DE RESORTE	1					
20	5PW–Y283M–00–P0	PANEL, DE CONSOLA 2	1					MBL2
21	1TX–28371–00	.AMORTIGUADOR	1					
22	5PW–2177L–00	.PLACA DE RESORTE	1					
23	5PW–26280–00	ESPEJO COMPLETO (IZQUIERDO)	1					

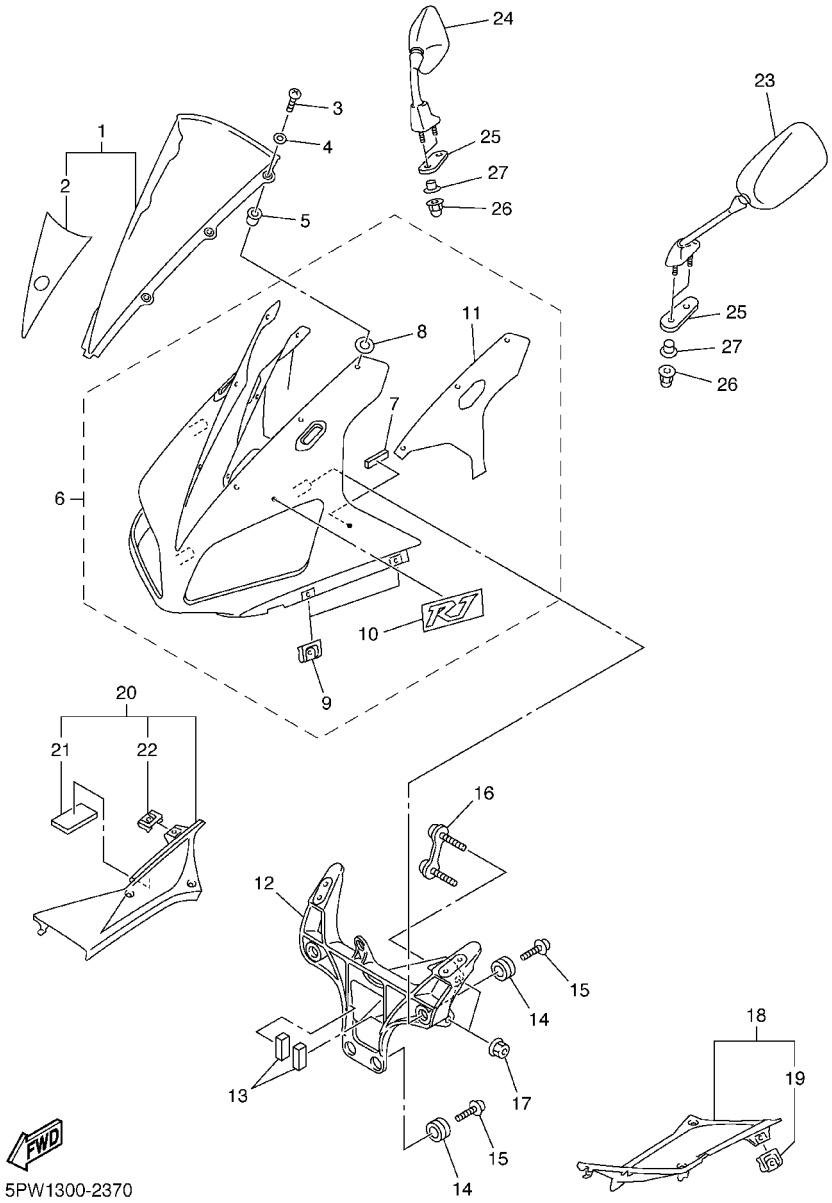

FIG. 37 BOVEDA 1

REF. NO.	CODIGO NO.	DESCRIPCION	5PW1					OBSERVACION
24	5PW–26290–00	ESPEJO COMPLETO (DERECHO)	1					
25	4SV–26298–00	PLACA DE ESPEJO 1	2					
26	90176–06055	TUERCA CORONA	4					
27	90387–06024	COLLAR	4					

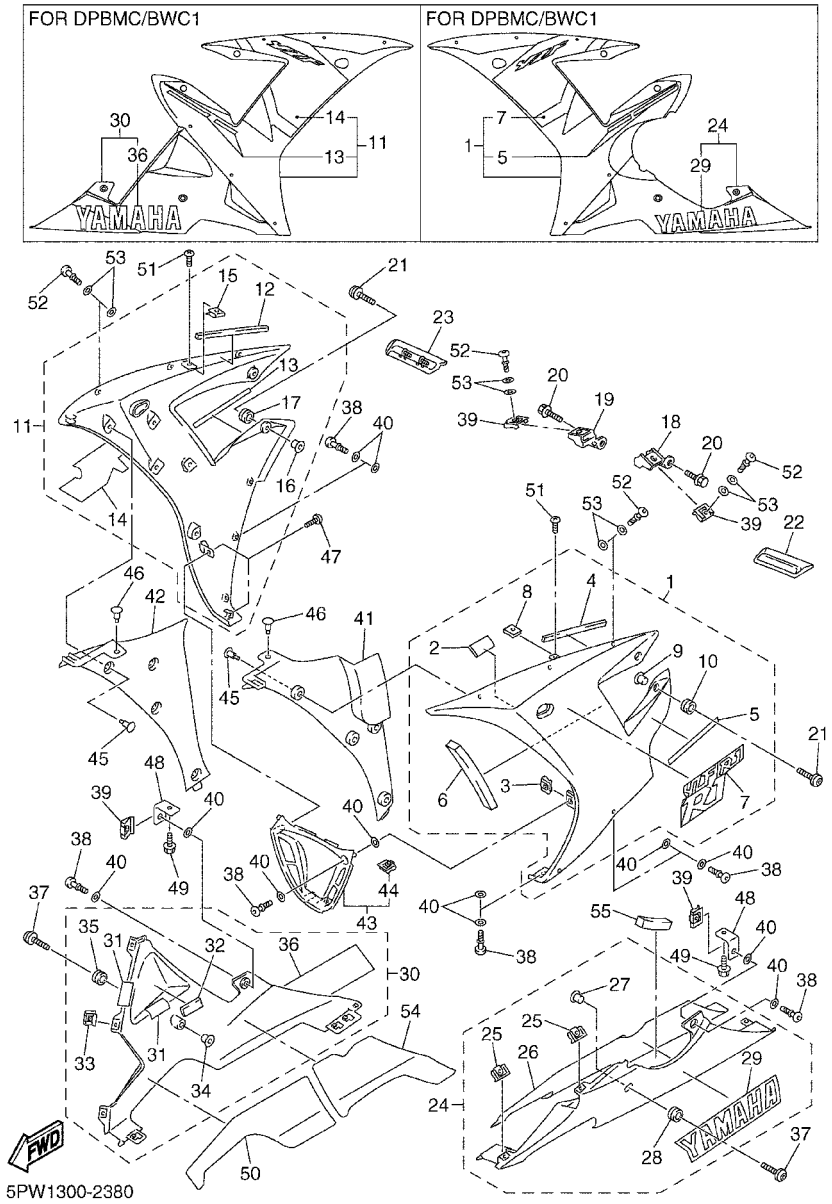

FIG. 38 BOVEDA 2

REF. NO.	CODIGO NO.	DESCRIPCION	5PW1					OBSERVACION
1	5PW–Y283U–00–P0	PANEL 1	1					UR BWC1 PARA VRC1
	5PW–Y283U–10–P1	PANEL 1	1					UR DPBMC PARA DPBMC
	5PW–Y283U–20–P2	PANEL 1	1					UR MBL2 PARA S3
	5PW–Y283U–30–P1	PANEL 1	1					UR DPBMC PARA DPBMC/BWC1
2	1TX–28371–00	.AMORTIGUADOR	1					
3	5PW–2177L–00	.PLACA DE RESORTE	1					
4	5PW–28307–00	.SELLO	1					
5	5PW–28328–00	.EMBLEMA	1					UR PARA VRC1
	5PW–28328–10	.EMBLEMA	1					UR PARA DPBMC
	5PW–28328–20	.EMBLEMA	1					UR PARA S3
	5PW–28328–A0	.EMBLEMA	1					UR PARA DPBMC/BWC1
6	5PW–28371–00	.AMORTIGUADOR	1					
7	5PW–28391–00	.CALCOMANIA DE BOVEDA 1	1					UR PARA VRC1
	5PW–28391–10	.CALCOMANIA DE BOVEDA 1	1					UR PARA DPBMC
	5PW–28391–20	.CALCOMANIA DE BOVEDA 1	1					UR PARA S3
	5PW–28393–00	.CALCOMANIA 3	1					UR PARA DPBMC/BWC1
8	90183–05074	.TUERCA DE RESORTE	1					
9	90387–065J6	.COLLAR	2					
10	90480–12596	.TAPON	2					
11	5PW–Y283V–00–P0	PANEL 2	1					UR BWC1 PARA VRC1
	5PW–Y283V–10–P1	PANEL 2	1					UR DPBMC PARA DPBMC
	5PW–Y283V–20–P2	PANEL 2	1					UR MBL2 PARA S3
	5PW–Y283V–40–P1	PANEL 2	1					UR DPBMC PARA DPBMC/BWC1
12	5PW–28307–00	.SELLO	1					
13	5PW–28338–00	.EMBLEMA	1					UR PARA VRC1
	5PW–28338–10	.EMBLEMA	1					UR PARA DPBMC
	5PW–28338–20	.EMBLEMA	1					UR PARA S3

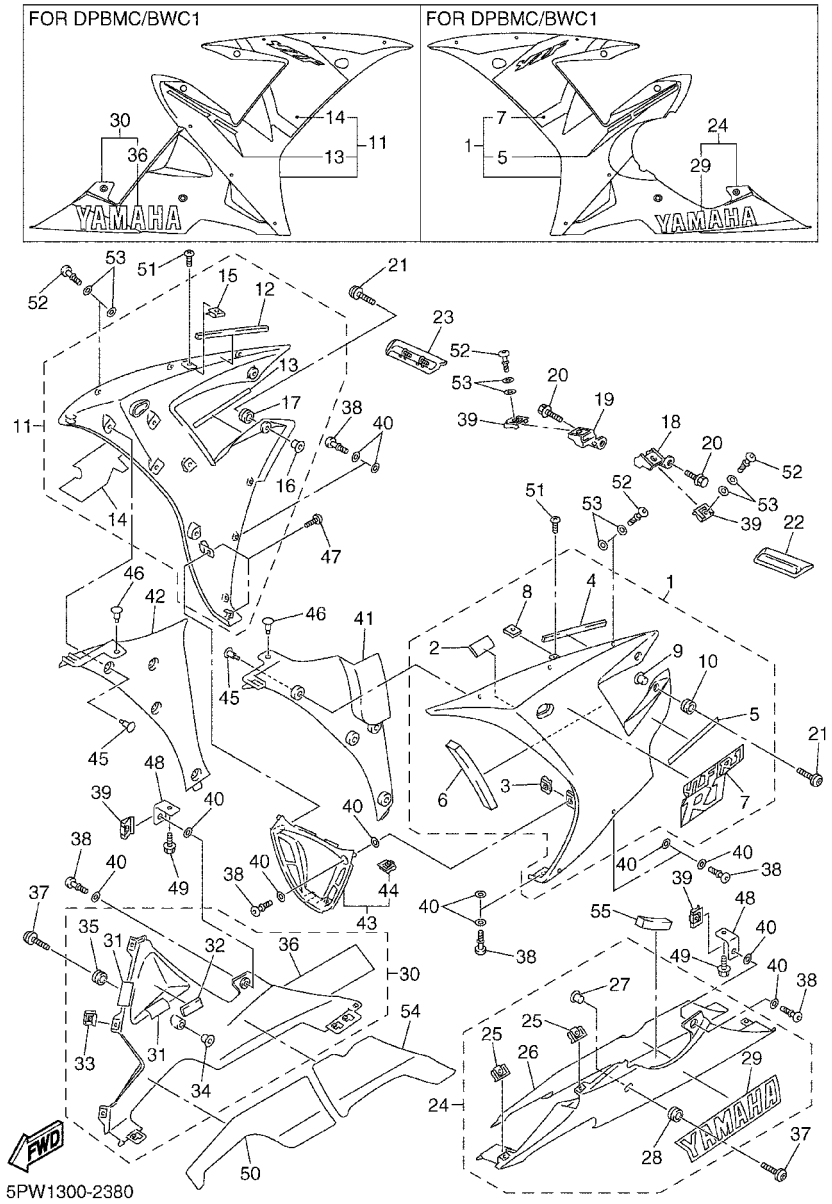

FIG. 38 BOVEDA 2

REF. NO.	CODIGO NO.	DESCRIPCION	5PW1					OBSERVACION
13	5PW–28338–A0	.EMBLEMA	1					UR PARA DPBMC/BWC1
14	5PW–28392–00	.CALCOMANIA DE BOVEDA 2	1					UR PARA VRC1
	5PW–28392–10	.CALCOMANIA DE BOVEDA 2	1					UR PARA DPBMC
	5PW–28392–20	.CALCOMANIA DE BOVEDA 2	1					UR PARA S3
	5PW–28394–00	.CALCOMANIA 4	1					UR PARA DPBMC/BWC1
15	90183–05074	.TUERCA DE RESORTE	1					
16	90387–065J6	.COLLAR	2					
17	90480–12596	.TAPON	2					
18	5PW–2836A–00	SOPORTE 1	1					
19	5PW–2836E–00	SOPORTE 2	1					
20	90119–06052	TORNILLO CON ARANDELA	2					
21	90149–06302	TORNILLO DE REGLAJE	4					
22	5PW–2832M–00	PROTECTOR 1	1					
23	5PW–2832N–00	PROTECTOR 2	1					
24	5PW–Y2808–00–P0	CUBIERTA INFERIOR	1					UR MBL2 PARA VRC1, DPBMC
	5PW–Y2808–10–P1	CUBIERTA INFERIOR	1					UR S3 PARA S3
	5PW–Y2808–20–P2	CUBIERTA, INFERIOR	1					UR DPBMC PARA DPBMC/BWC1
25	5PW–2177L–00	.PLACA DE RESORTE	2					
26	5PW–2848L–00	.ASIENTO 3	1					
27	90387–065J6	.COLLAR	1					
28	90480–12596	.TAPON	1					
29	99246–00320	.EMBLEMA, YAMAHA	1					UR PARA VRC1,DPBMC
	99247–00320	.EMBLEMA, YAMAHA	1					UR PARA S3
	99241–00320	.EMBLEMA, YAMAHA	1					UR PARA DPBMC/BWC1
30	5PW–Y2809–00–P0	CUBIERTA INFERIOR	1					UR MBL2 PARA VRC1, DPBMC
	5PW–Y2809–10–P1	CUBIERTA INFERIOR	1					UR S3 PARA S3
	5PW–Y2809–20–P2	CUBIERTA, INFERIOR	1					UR DPBMC PARA DPBMC/BWC1

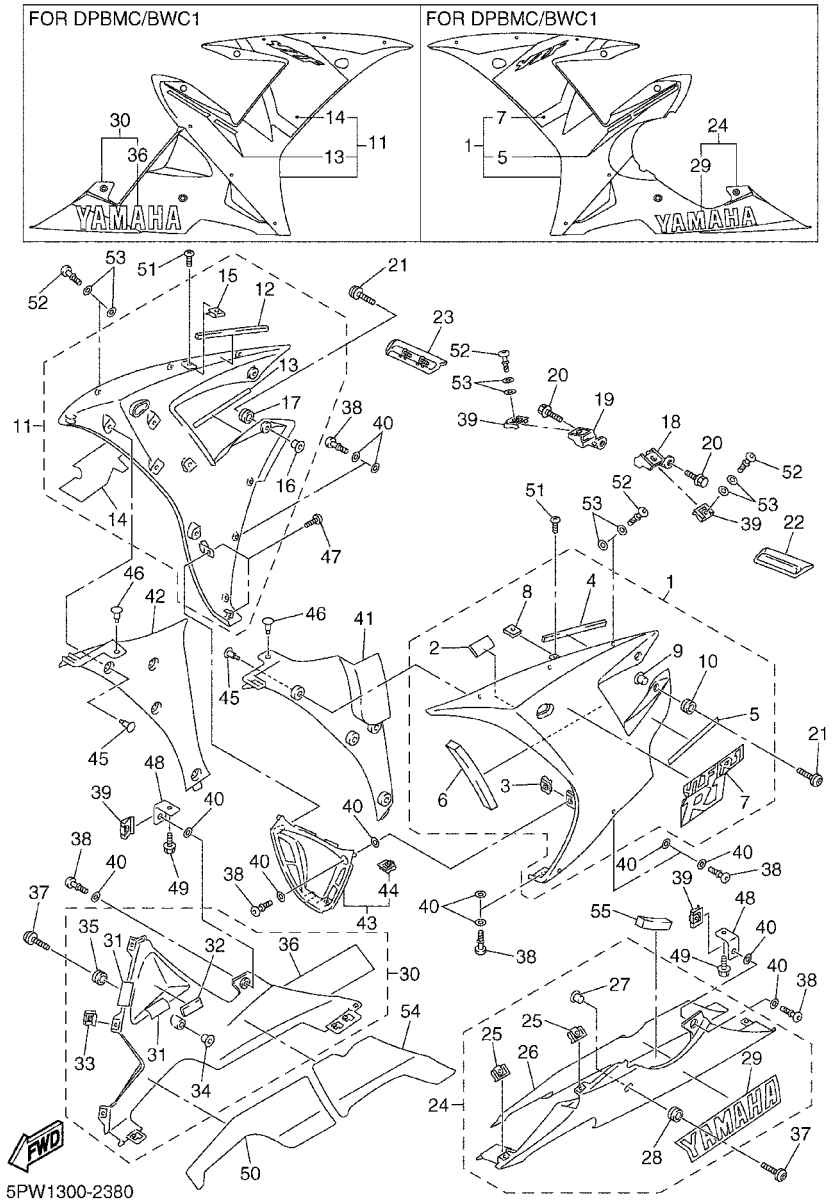

FIG. 38 BOVEDA 2

REF. NO.	CODIGO NO.	DESCRIPCION	5PW1					OBSERVACION
31	1JK–21735–00	.SELLO 2	2					
32	1TX–28371–00	.AMORTIGUADOR	1					
33	5PW–2177L–00	.PLACA DE RESORTE	3					
34	90387–065J6	.COLLAR	1					
35	90480–12596	.TAPON	1					
36	99246–00320	.EMBLEMA, YAMAHA	1					UR PARA VRC1,DPBMC
	99247–00320	.EMBLEMA, YAMAHA	1					UR PARA S3
	99241–00320	.EMBLEMA, YAMAHA	1					UR PARA DPBMC/BWC1
37	90149–06302	TORNILLO DE REGLAJE	2					
38	5PW–28386–00	CABEZA	9					
39	5PW–2177L–00	PLACA DE RESORTE	4					
40	2TK–21757–00	ARANDELA ESPECIAL 1	18					
41	5PW–2836K–00	PANEL 1	1					
42	5PW–2836L–00	PANEL 2	1					
43	5PW–Y283S–00	PANEL 3	1					
44	5PW–2177L–00	.PLACA DE RESORTE	1					
45	90269–06081	REMACHE	8					
46	90269–07077	REMACHE	2					
47	97707–50016	TORNILLO ROSCA HEMBRA	2					
48	5PW–2836F–00	MENSULA 3	2					
49	95807–06012	TUERCA DE REBORDE	2					
50	5PW–2848M–00	ASIENTO4	1					
51	90154–05013	TORNILLO DE LIGAR	2					
52	5PW–28386–00	CABEZA	8					
53	2TK–21757–00	ARANDELA ESPECIAL 1	12					
54	5PW–2848N–00	ASIENTO 5	1					
55	5PW–2834E–00	AMORTIGUADOR 1	1					

FIG. 39 GENERADOR

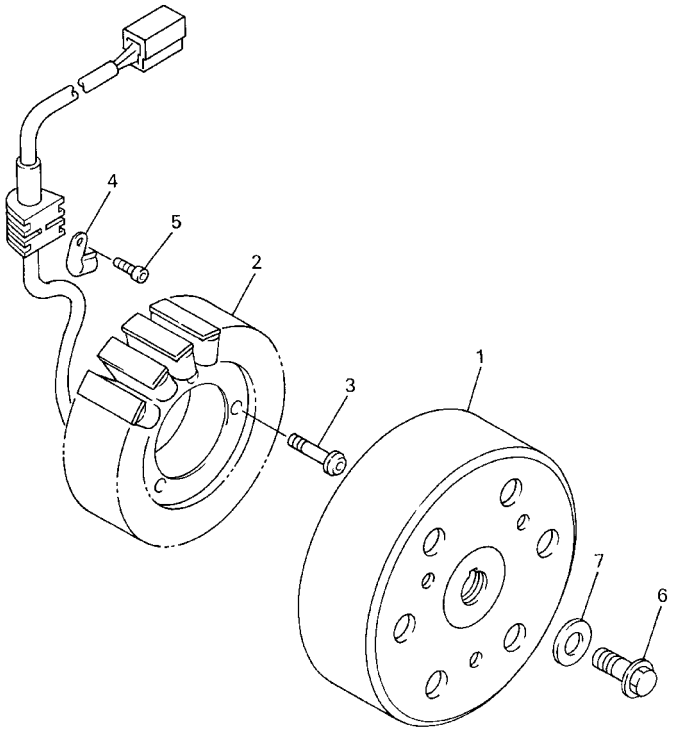

4XV352-8380

REF. NO.	CODIGO NO.	DESCRIPCION	5PW1					OBSERVACION
1	5PW–81450–00	ROTOR COMPLETO	1					
2	5PW–81410–00	ESTATOR COMPLETO	1					
3	90149–06013	TORNILLO DE REGLAJE	3					
4	90465–14011	BRIDA	1					
5	90110–06018	TORNILLO ALLEN	1					
6	90105–105A6	TORNILLO	1					
7	90201–103U7	ARANDELA PLANA	1					

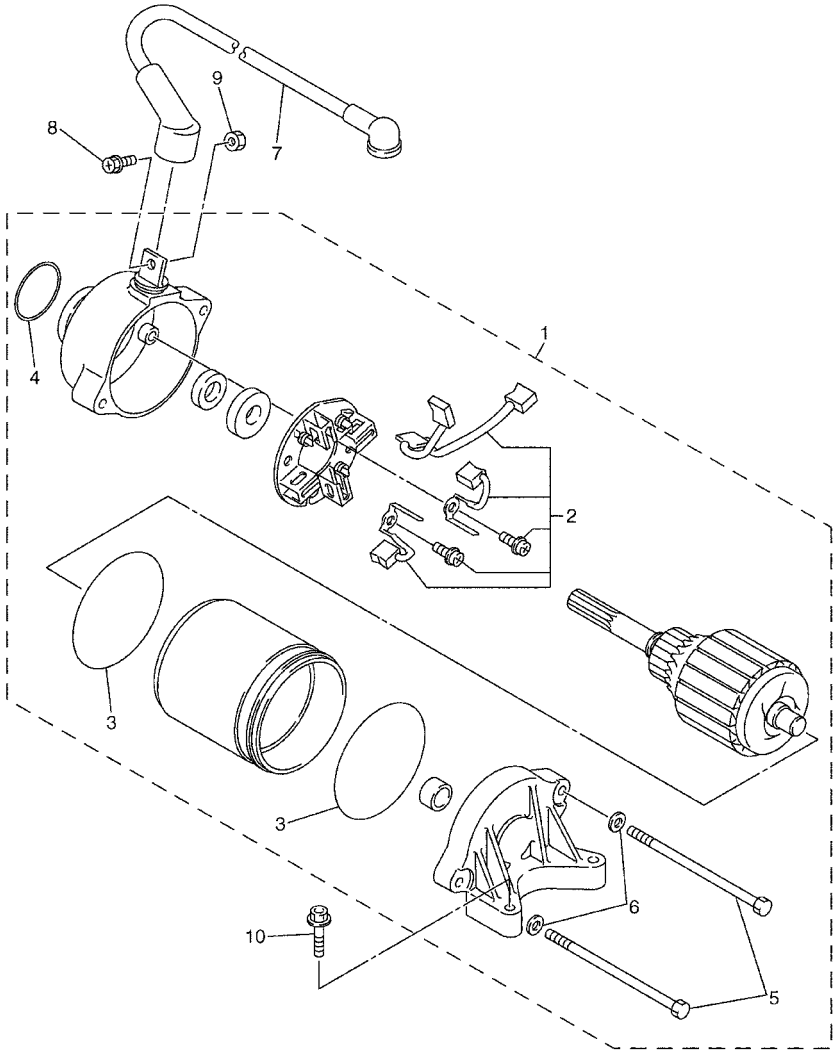

5PW1300-2400

FIG. 40 MOTOR DE ARRANQUE

REF. NO.	CODIGO NO.	DESCRIPCION	5PW1					OBSERVACION
1	5PW–81890–00	MOTOR DE ARRANQUE COMPLETO	1					
2	5PW–81801–00	.JUEGO DE ESCOBILLA	1					
3	93210–55669	.ANILLO O	2					
4	93210–25711	.ANILLO O	1					
5	5JJ–81846–00	.TORNILLO	2					
6	5JJ–8181L–00	.ARANDELA	2					
7	5PW–8183G–00	CABLE COMPL.	1					
8	5JJ–81828–00	ARANDELA DE EMPUJE 2	1					
9	95307–05700	TUERCA	1					
10	95027–06025	PERNO, DE BRIDA	2					

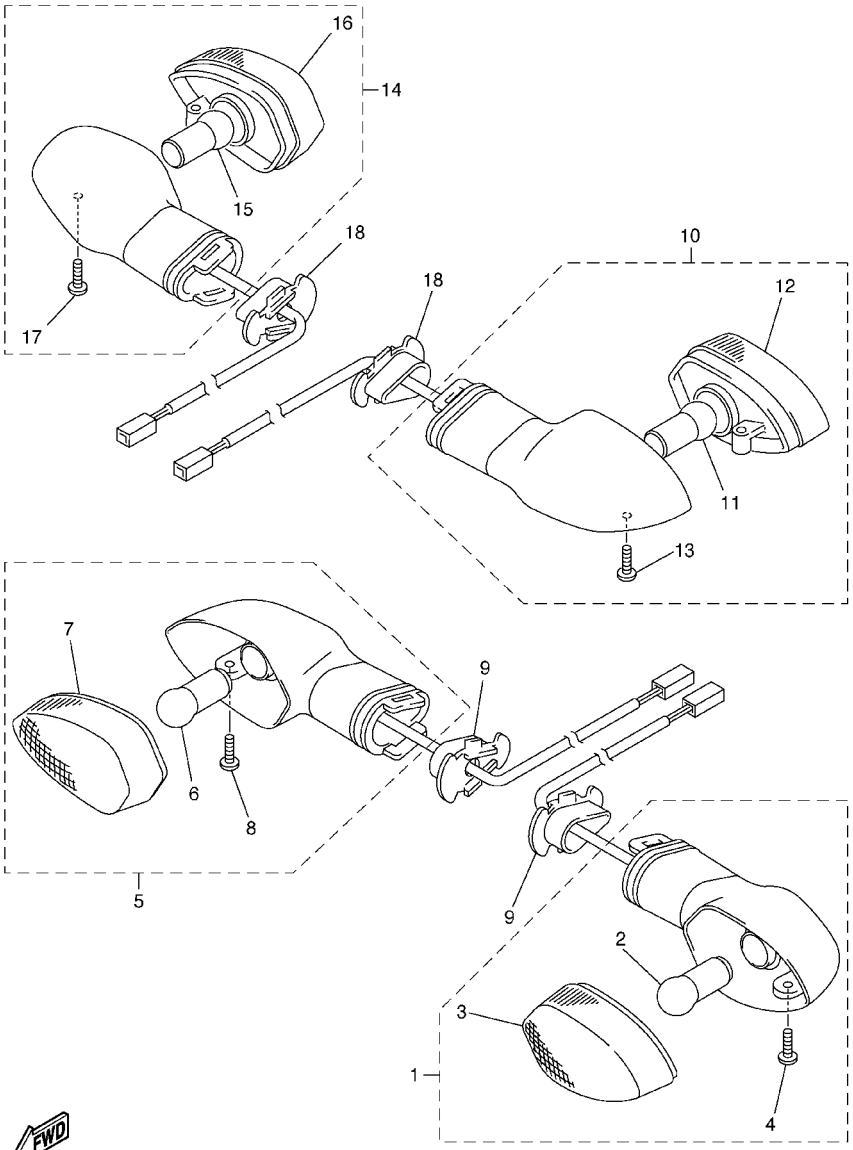

5PW1300-2410

FIG. 41 LUZ DE DESTELLADOR

REF. NO.	CODIGO NO.	DESCRIPCION	5PW1					OBSERVACION
1	5PW–83310–01	DESTELLADOR DE LUZ DELANT.	1					
2	1KH–83311–00	.BOMBILLA (12V–10W)	1					
3	5PW–8333A–00	.LENTES COMPLETO	1					
4	97706–04012	.TORNILLO ROSCA HEMBRA	1					
5	5PW–83320–01	DESTELLADOR DE LUZ DELANT.	1					
6	1KH–83311–00	.BOMBILLA (12V–10W)	1					
7	5PW–8334A–00	.LENTES COMPLETO	1					
8	97706–04012	.TORNILLO ROSCA HEMBRA	1					
9	5PW–83318–00	SOPORTE DE DESTELLADOR 1	2					
10	5PW–83330–00	DESTELLADOR DE LUZ TRAS.COMPL.	1					
11	1KH–83311–00	.BOMBILLA (12V–10W)	1					
12	5PW–8334A–00	.LENTES COMPLETO	1					
13	97706–04012	.TORNILLO ROSCA HEMBRA	1					
14	5PW–83340–00	DESTELLADOR DE LUZ COMPL.	1					
15	1KH–83311–00	.BOMBILLA (12V–10W)	1					
16	5PW–8333A–00	.LENTES COMPLETO	1					
17	97706–04012	.TORNILLO ROSCA HEMBRA	1					
18	5PW–83318–00	SOPORTE DE DESTELLADOR 1	2					

FIG. 42 MEDIDOR

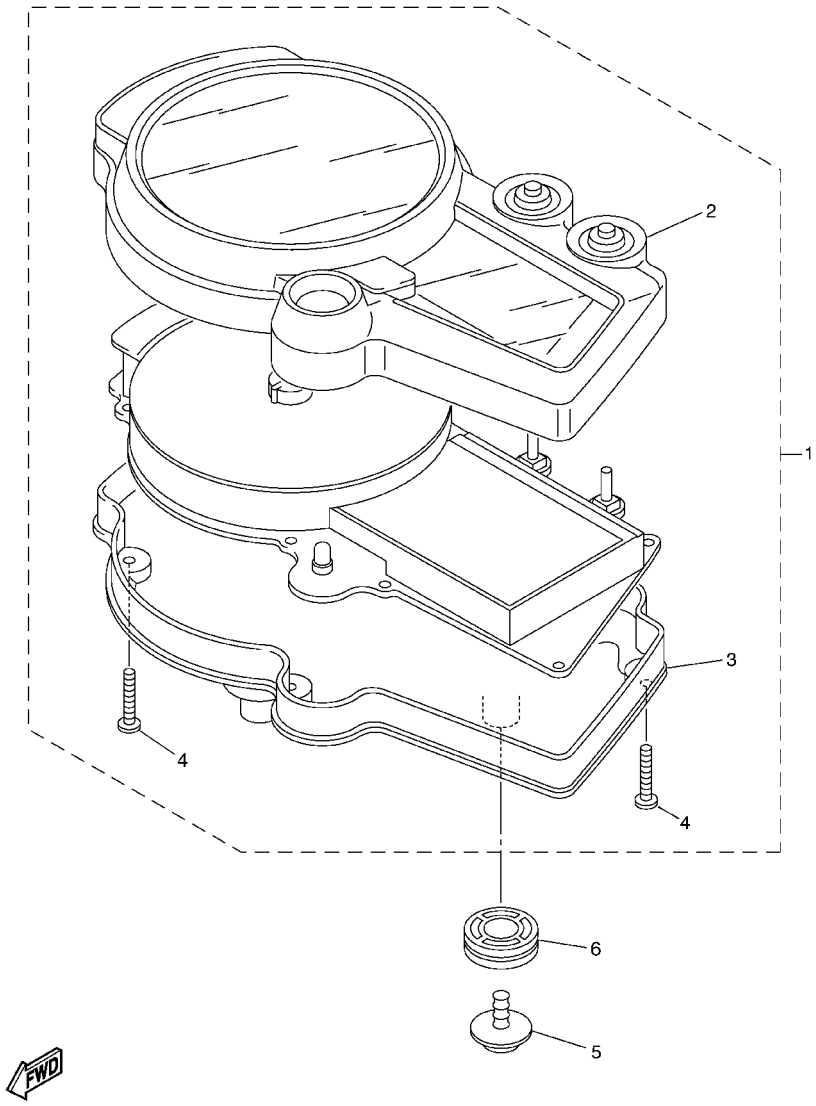

5PW1300-2420

REF. NO.	CODIGO NO.	DESCRIPCION	5PW1					OBSERVACION
1	5PW–83500–00	VELOCIMETRO COMPLETO (KM/H)	1					
2	5PW–8353E–00	.CAJA DE MEDIDOR SUPERIOR	1					
3	5PW–83572–00	.CAJA DE VELOCIMETRO INFERIOR	1					
4	97707–30016	.TORNILLO ROSCA HEMBRA	8					
5	90164–05014	TORNILLO ROSCA HEMBRA	3					
6	4XV–83513–00	AMORTIGUADOR	3					

FIG. 43 FARO DELANTERO

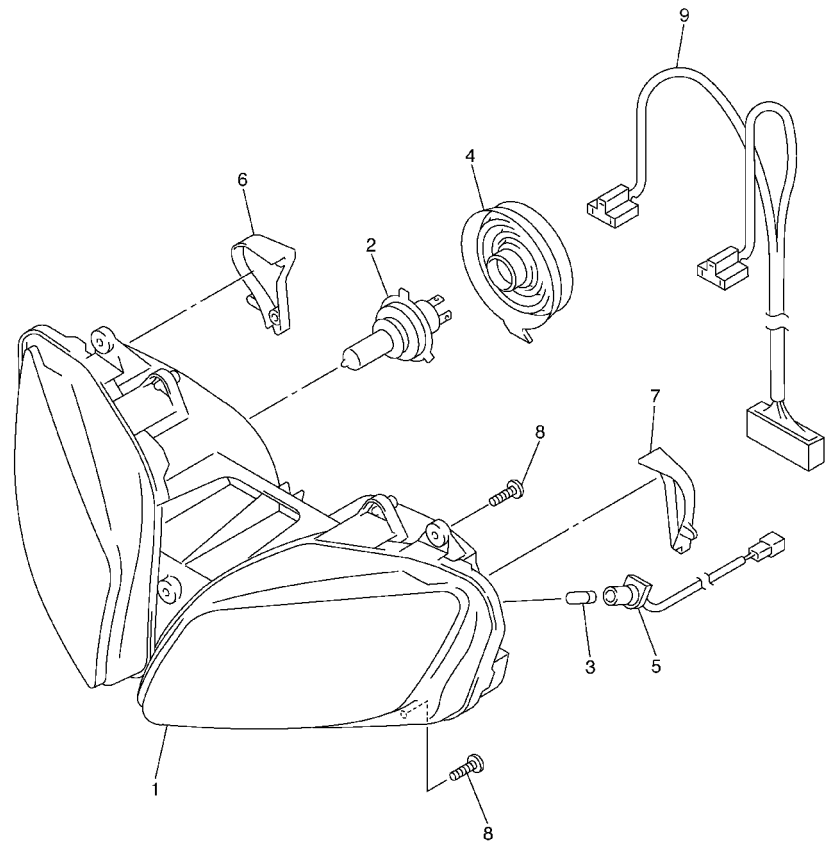

FWD

5PW1300-2430

REF. NO.	CODIGO NO.	DESCRIPCION	5PW1					OBSERVACION
1	5PW–84310–00	UNIDAD DE FARO DELANTERO COMPL	1					
2	8V0–84314–10	BOMBILLA DE FARO DELANTERO (12V–60/55)	2					
3	4SV–84347–00	BOMBILLA (12V–5W)	2					
4	4SV–84397–00	CUBIERTA DE ENCASTRE	2					
5	5PW–84312–00	ENCASTRE	2					
6	5PW–84385–00	TAPA	1					
7	5PW–84386–00	TAPA	1					
8	97707–50016	TORNILLO ROSCA HEMBRA	5					
9	5PW–84359–00	CABLE DE FARO DELANTERO	1					

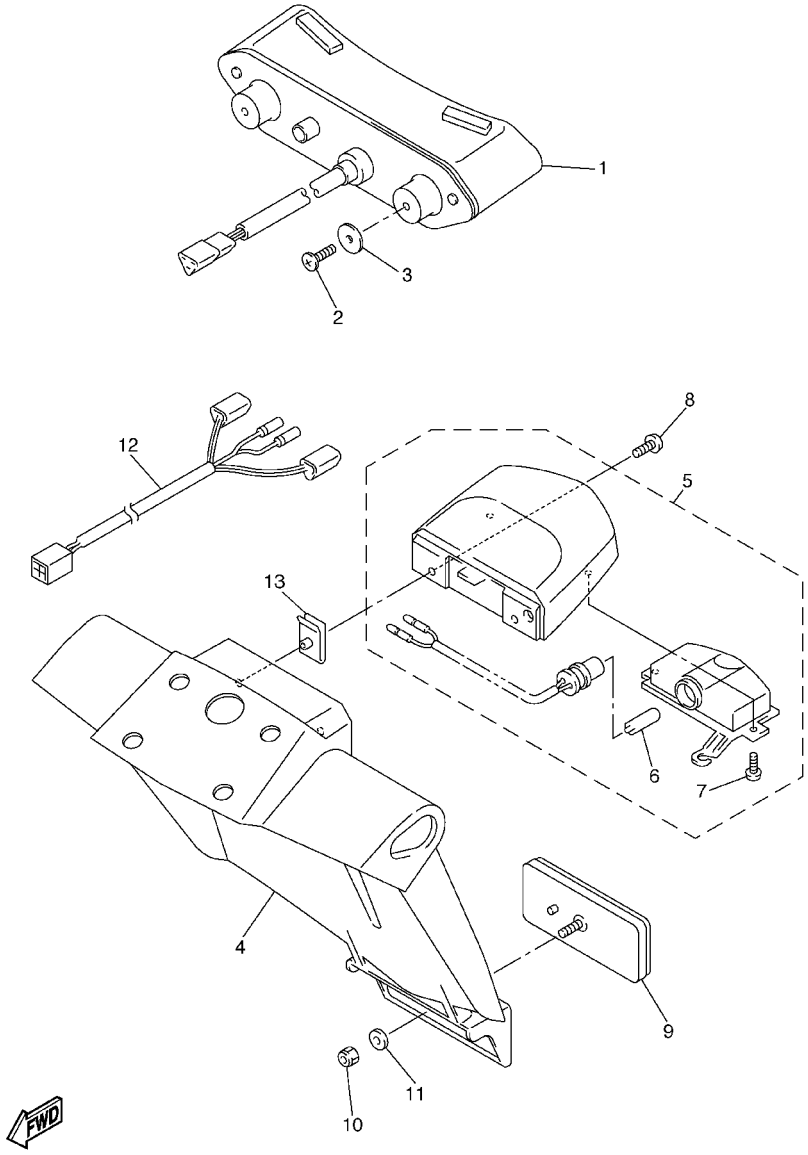

5PW1300-2440

FIG. 44 LUZ DE COLA

REF. NO.	CODIGO NO.	DESCRIPCION	5PW1					OBSERVACION
1	5PW–84710–00	CONJT. FARO TRASERO	1					
2	97707–50016	TORNILLO ROSCA HEMBRA	2					
3	90201–05033	ARANDELA PLANA	2					
4	5PW–21629–00	GUARDABARRO INFERIOR	1					
5	5PW–84745–00	UNIDAD DE LUZ DE LICENCIA COMP	1					
6	4HC–84744–00	.BOMBILLA (12V–5W)	1					
7	97706–04012	.TORNILLO ROSCA HEMBRA	2					
8	5PW–84726–00	TORNILLO	2					
9	3Y6–85130–02	REFLECTOR TRASERO COMPLETO	1					
10	95607–05100	TUERCA AUTOBLOCANTE	1					
11	90201–05725	ARANDELA PLANA	1					
12	5PW–84717–00	CABLE DE FARO TRASERO	1					
13	4KB–84117–00	TUERCA	2					

FIG. 45 INTERRUPTOR DE MANIJA. PALANCA

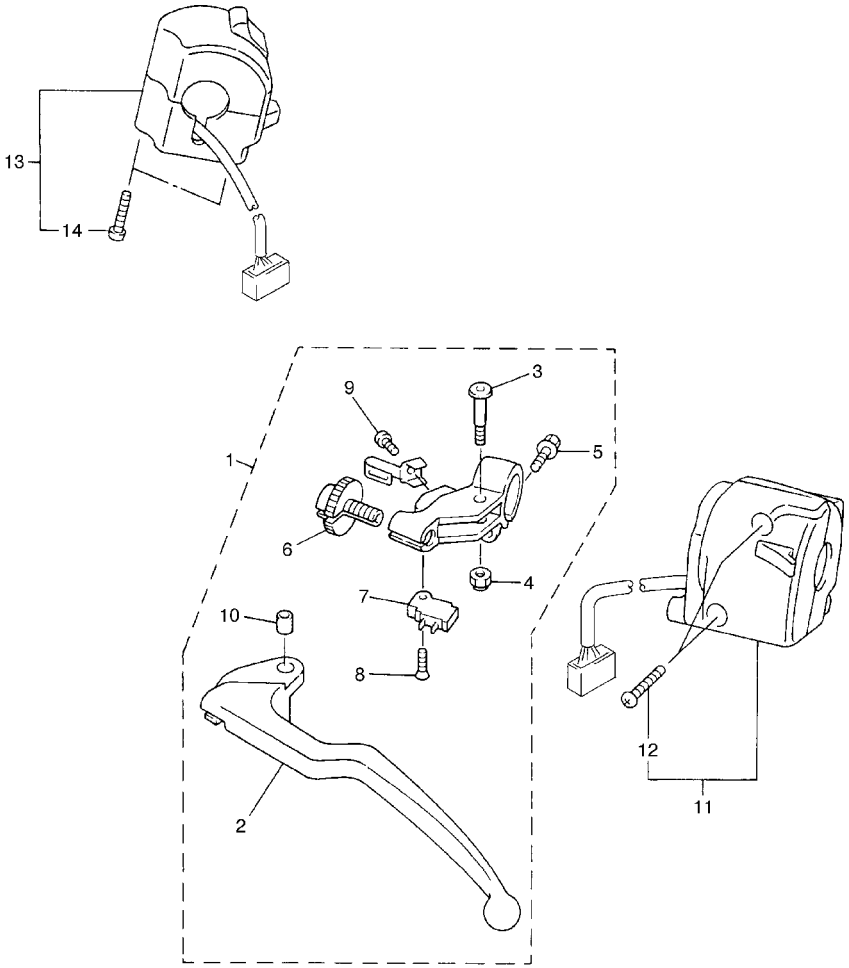

5PW1300-2450

REF. NO.	CODIGO NO.	DESCRIPCION	5PW1					OBSERVACION
1	4XV–82910–13	SOPORTE DE LEVA COMPLT 1	1					
2	4XV–83912–11	.PALANCA 1	1					
3	4XV–83945–00	.PERNO DE PALANCA	1					
4	95607–06100	.TUERCA AUTOBLOCANTE	1					
5	95027–06020	.PERNO, DE BRIDA	1					
6	5LV–83951–00	.PERNO DE CABLE DE AJUSTE	1					
7	4XV–82917–01	.INTERRUPTOR	1					
8	98707–03016	.TORNILLO DE CABEZA PLANA	1					
9	98507–04010	.TORNILLO DE CABEZA CON PLANA	1					
10	5JJ–83913–00	.COLLAR DE PALANCA 1	1					
11	5PW–83972–00	INTERRUPTOR DE MANIJA 4	1					
12	98507–05025	.TORNILLO DE CABEZA CON PLANA	2					
13	5RT–83963–00	INTERRUPTOR DE MANIJA 3	1					
14	98507–05045	.TORNILLO DE CABEZA CON PLANA	2					

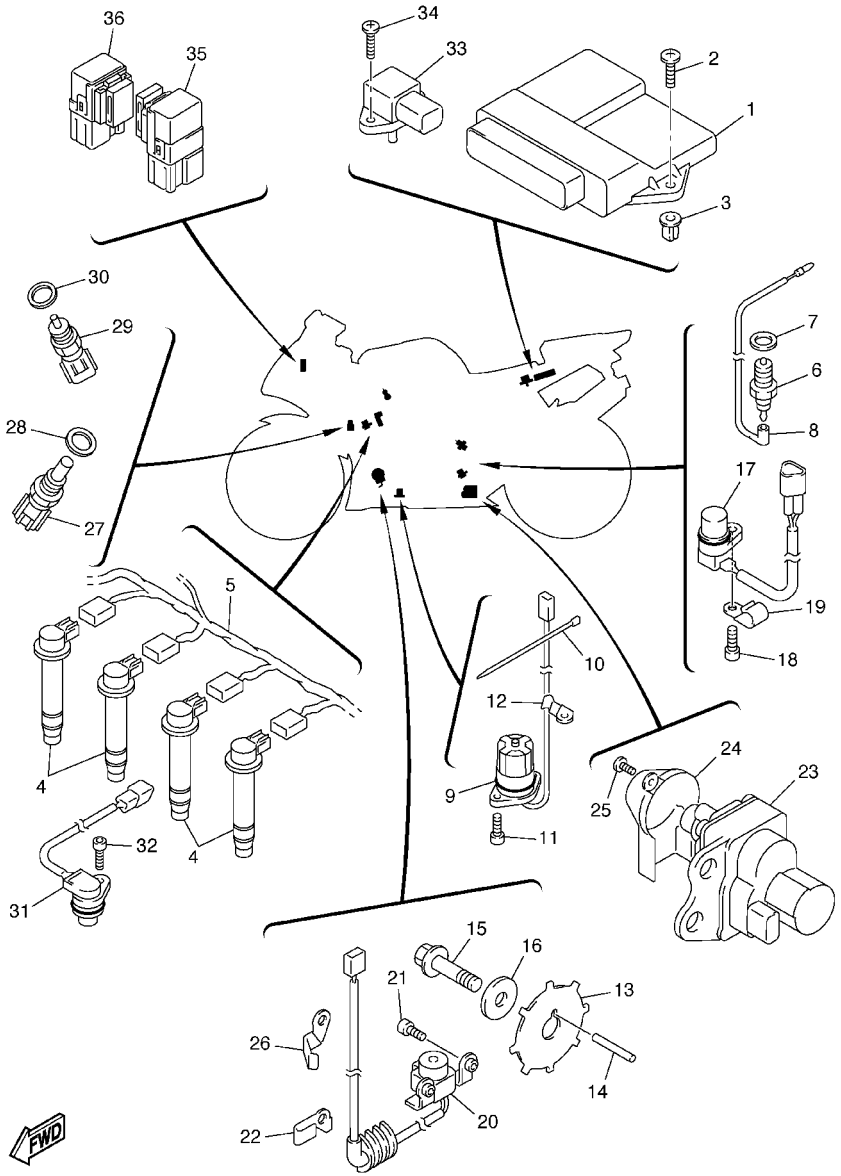

5PW1300-2460

FIG. 46 EQUIPO ELECTRICO 1

REF. NO.	CODIGO NO.	DESCRIPCION	5PW1					OBSERVACION
1	5PW–8591A–00	UNIDAD CONTROL	1					
2	97707–60020	TORNILLO ROSCA HEMBRA	2					
3	90338–08226	TAPON	2					
4	5PW–82310–00	BOBINA DE ENCENDIDO COMPLETA	4					
5	5PW–82309–00	CABLE SUBCONDUCTOR	1					
6	3GB–82540–01	INTERRUPTOR NEUTRAL COMPL	1					
7	90430–10148	JUNTA	1					
8	5JJ–82541–00	CABLE CONDUCTOR	1					
9	5PW–85720–00	MEDIDOR DE NIVEL DE ACEITE	1					
10	5Y9–12491–00	GRAMPA 1	1					
11	91317–06014	PERNO	2					
12	90465–08013	BRIDA	1					
13	5PW–81673–00	ROTOR	1					
14	93604–29151	PASADOR DE CLAVIJA	1					
15	90105–10290	TORNILLO	1					
16	90201–107K6	ARANDELA PLANA	1					
17	4XV–83755–01	SENSOR DE VELOCI	1					
18	91317–06014	PERNO	1					
19	90465–08028	BRIDA	1					
20	5PW–81670–00	RECOGEDOR COMPL.	1					
21	90110–06018	TORNILLO ALLEN	2					
22	90465–08191	BRIDA	1					
23	5PW–85820–00	UNIDADDELSERVOMOTOR	1					
24	5PW–85829–00	CUBIERTA	1					
25	97707–50514	TORNILLO ROSCA HEMBRA	2					
26	90462–08225	BRIDA	1					
27	8CC–85790–01	TERMICA SENSORIO	1					

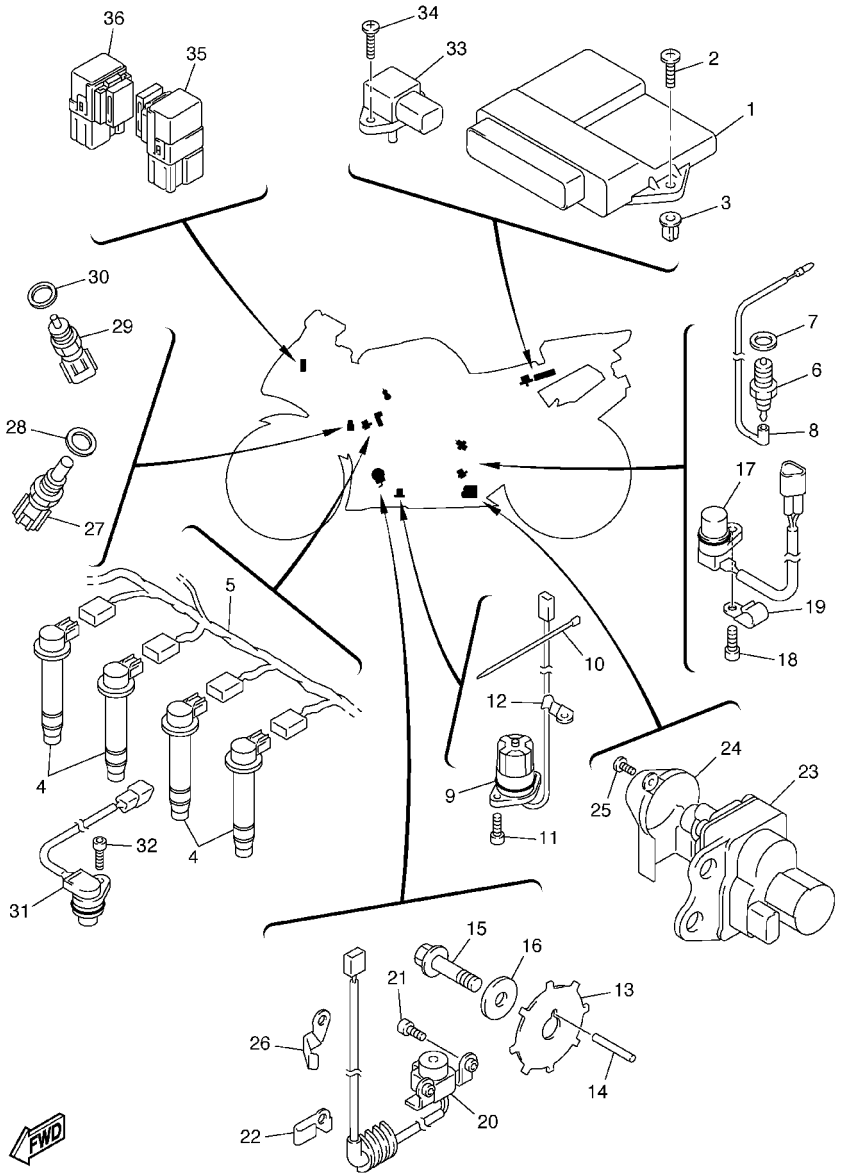

5PW1300-2460

FIG. 46 EQUIPO ELECTRICO 1

REF. NO.	CODIGO NO.	DESCRIPCION	5PW1					OBSERVACION
28	90201–12790	ARANDELA PLANA	1					
29	5FL–85790–00	TERMICA SENSORIO	1					
30	90430–12202	JUNTA	1					
31	5PW–85896–00	SENSOR DE LEVA	1					
32	90110–06019	TORNILLO ALLEN	1					
33	5JW–82380–00	SENSOR DE PRESION	1					
34	97707–50020	TORNILLO ROSCA HEMBRA	2					
35	5JJ–81950–10	RELE COMPLETO	1					
36	5JJ–81950–20	RELE COMPLETO	1					

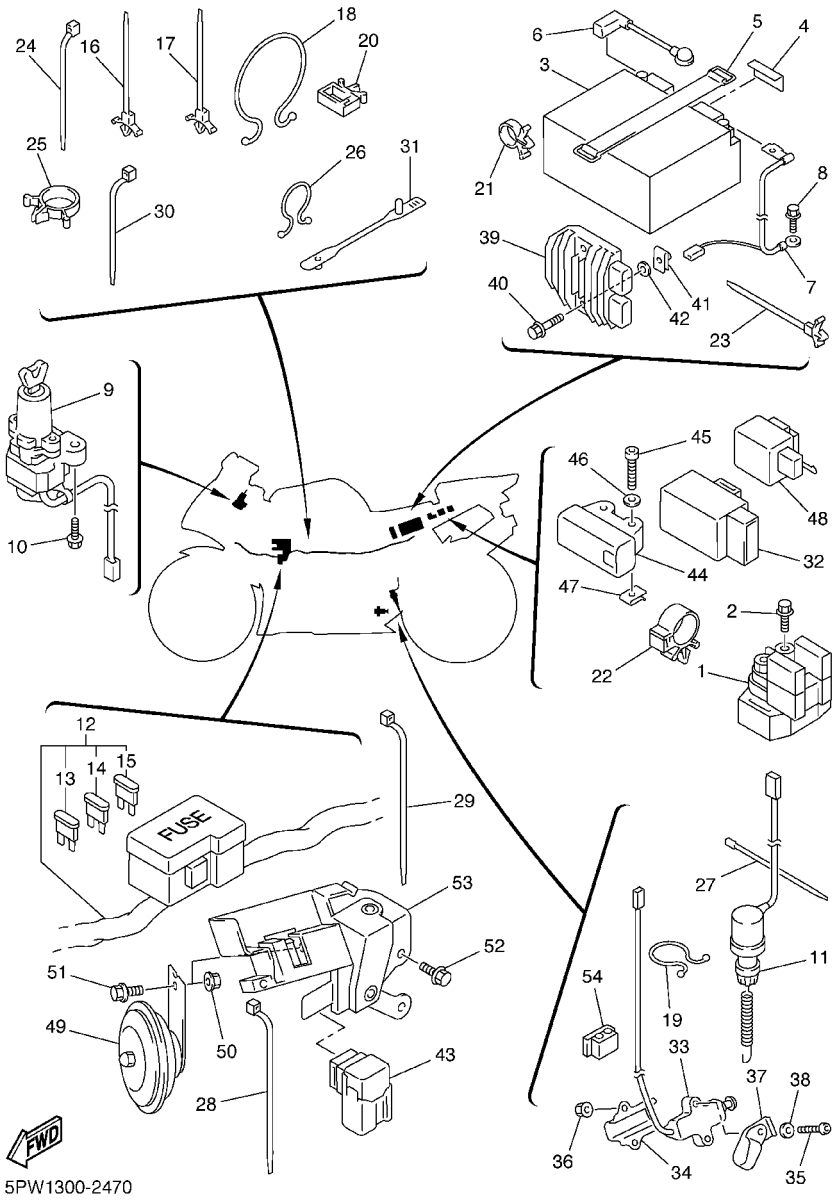

FIG. 47 EQUIPO ELECTRICO 2

REF. NO.	CODIGO NO.	DESCRIPCION	5PW1					OBSERVACION
1	5JW–81940–00	CONJUNTO ARRANCADOR RELEVO	1					
2	95027–06008	PERNO, DE BRIDA	2					
3	4TX–82100–02	BATERIA COMPLETA (GT12B–4)	1					
4	2AL–84553–00	AMORTIGUADOR	1					
5	5JJ–82131–00	TIRANTE DE BATERIA	1					
6	5PW–82115–00	CABLE CONDUCTOR POSITIVO	1					
7	5PW–82116–00	CABLE CONDUCTOR NEGATIVO	1					
8	95817–06012	TUERCA DE REBORDE	1					
9	5PW–82501–00	LLAVE DE IGNICION COMPLT	1					
10	90109–080G5	PERNO	2					
11	5PW–82530–00	INTERRUPTOR DE PARADA COMPLETO	1					
12	5PW–82590–00	CONJUNTO DE CABLES	1					
13	5JJ–82151–10	.FUSIBLE (15A–BL)	4					
14	5JJ–82151–20	.FUSIBLE (20A–BL)	2					
15	5JJ–82151–90	.FUSIBLE (5A–BL)	3					
16	90464–12036	BRIDA	2					
17	90464–12036	BRIDA	2					
18	90464–37257	BRIDA	1					
19	90464–16039	BRIDA	1					
20	90464–07004	BRIDA	3					
21	90464–13133	BRIDA	2					
22	90464–16006	BRIDA	1					
23	90464–12036	BRIDA	1					
24	90464–13073	BRIDA	1					
25	90464–15157	BRIDA	2					
26	90464–16039	BRIDA	1					
27	5Y9–12491–00	GRAMPA 1	1					

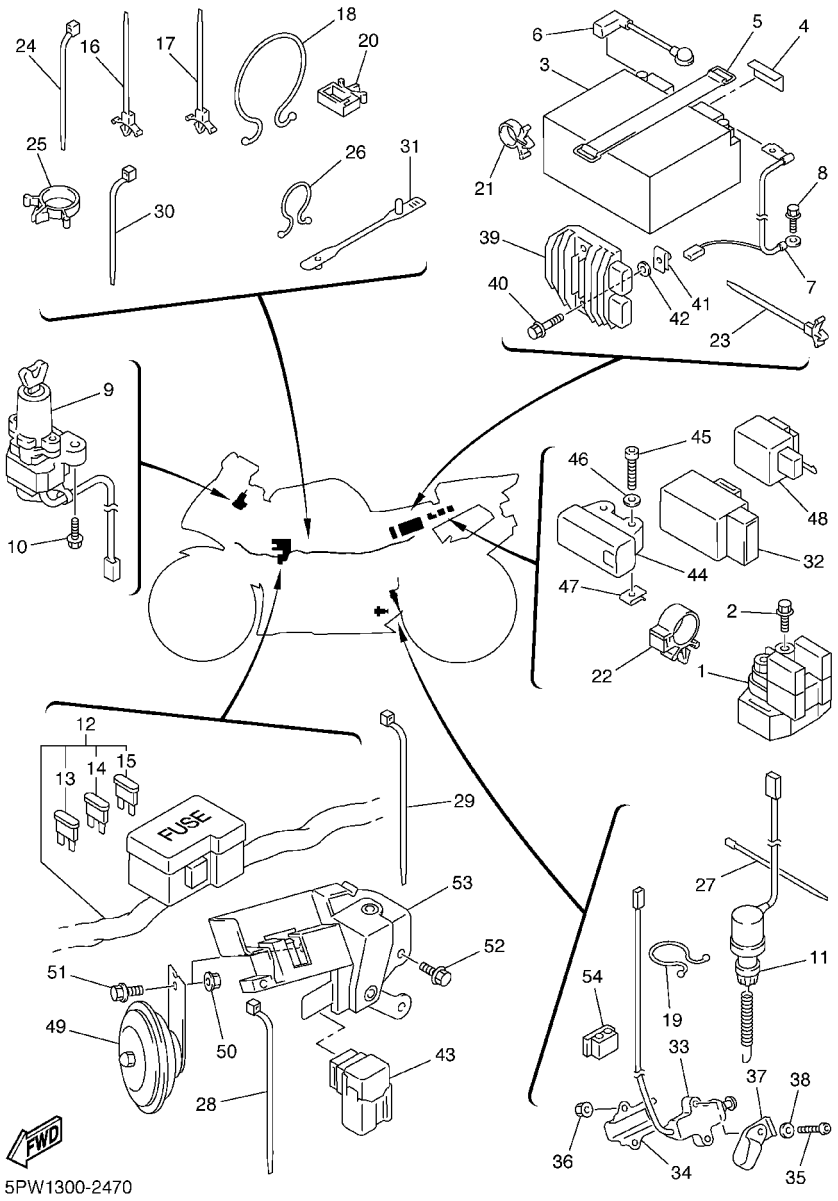

FIG. 47 EQUIPO ELECTRICO 2

REF. NO.	CODIGO NO.	DESCRIPCION	5PW1					OBSERVACION
28	90464–13073	BRIDA	1					
29	90464–13073	BRIDA	1					
30	90464–13077	BRIDA	1					
31	90464–17001	BRIDA	1					
32	5PW–81950–00	RELE COMPLETO	1					
33	5PX–82566–50	INTERRUPTOR	1					
34	5JJ–82388–00	PLACA	1					
35	92017–05030	PERNO	2					
36	95607–05200	TUERCA DE AUTO–CIERRE	2					
37	90461–10002	GRAPA	1					
38	90201–057H5	ARANDELA PLANA	1					
39	5JW–81960–00	RECTIFICADOR Y REGULADOR	1					
40	95827–06030	TUERCA DE REBORDE	2					
41	90183–06053	TUERCA DE RESORTE	2					
42	90202–06001	ARANDELA DE PLANA	2					
43	5JJ–81950–20	RELE COMPLETO	1					
44	5PS–82576–01	INTERRUP.DE PARADA COMPLETO	1					
45	91317–04025	PERNO	2					
46	90201–047A2	ARANDELA PLANA	2					
47	90183–04039	TUERCA DE RESORTE	2					
48	4GY–83350–00	RELE DE DESTELLADOR COMPL.	1					
49	3TB–83371–01	BOCINA	1					
50	95707–06500	TUERCA DE BRIDA	1					
51	95807–06012	TUERCA DE REBORDE	1					
52	95807–06012	TUERCA DE REBORDE	2					
53	5PW–2134K–00	SOPORTE DE BOCINA	1					
54	90464–06004	BRIDA	1					

INDICE NUMERICO

CODIGO NO.	REF. NO.
4SV–W0041–00	E – 7
3TU–W0042–51	E – 12
5PW–W0045–00	E – 2
5PW–W0046–50	E – 5
4JG–W0047–00	E – 5
5PW–W0047–00	E – 2
5PW–W0047–10	E – 2
1J3–W0048–00	E – 2
51L–W0048–00	E – 5
4JG–W0057–00	E – 5
5PW–W0057–00	E – 2
5PW–W0057–10	E – 2
2TV–W2470–00	D – 14
4SV–W2587–10	E – 7
5PW–YK241–M0–P0	D – 12
5PW–YK241–30–P0	D – 12
5PW–YK241–30–P1	D – 12
5PW–Y2410–30–01	D – 12
5PW–Y2808–00–P0	F – 3
5PW–Y2808–10–P1	F – 3
5PW–Y2808–20–P2	F – 3
5PW–Y2809–00–P0	F – 3
5PW–Y2809–10–P1	F – 3
5PW–Y2809–20–P2	F – 3
5PW–Y283G–00–P0	E – 14
5PW–Y283G–10–P1	E – 14
5PW–Y283G–20–P2	E – 14
5PW–Y283L–00–P0	E – 14
5PW–Y283M–00–P0	E – 14
5PW–Y283S–00	F – 4
5PW–Y283U–00–P0	F – 2
5PW–Y283U–10–P1	F – 2
5PW–Y283U–20–P2	F – 2
5PW–Y283U–30–P1	F – 2
5PW–Y283V–00–P0	F – 2
5PW–Y283V–10–P1	F – 2
5PW–Y283V–20–P2	F – 2
5PW–Y283V–40–P1	F – 2
5PW–Y2881–00	E – 14
5PW–11101–00	B – 2
4KG–1111G–00	B – 2
5PW–11119–00	B – 2
1WG–11133–11	B – 2
3TJ–11133–10	B – 2
4XV–11145–00	C – 5
4XV–11165–00	C – 5
5PW–11181–00	B – 2
5PW–11191–00	B – 2

CODIGO NO.	REF. NO.
5PW–11193–00	B – 2
214–11198–01	B – 12
5PW–1130E–00	C – 4
4XV–11411–00	B – 3
3GM–11416–A0	B – 3
3GM–11416–B0	B – 3
3GM–11416–00	B – 3
3GM–11416–10	B – 3
3GM–11416–20	B – 3
4XV–11549–00	B – 3
5LV–11603–00	B – 3
4XV–11631–10	B – 3
4XV–11633–00	B – 3
5PW–11650–00	B – 3
5JW–11654–00	B – 3
3GM–11656–A0	B – 3
3GM–11656–B0	B – 3
3GM–11656–00	B – 3
3GM–11656–10	B – 3
4XV–12111–00	B – 4
4XV–12112–00	B – 4
4XV–12113–00	B – 4
4XV–12114–00	B – 4
1HX–12116–01	B – 4
1HX–12117–00	B – 4
1WG–12117–00	B – 4
1HX–12118–00	B – 4
1WG–12118–00	B – 4
4SV–12119–00	B – 4
4TV–12119–00	B – 4
5LV–12121–00	B – 4
3GM–12126–00	B – 4
3FV–12153–09	B – 5
3FV–12153–20	B – 5
3FV–12153–30	B – 5
3LN–12153–09	B – 5
3LN–12153–20	B – 5
1HX–12168–A0	B – 4
1HX–12168–F0	B – 4
1HX–12168–H1	B – 4
1HX–12168–K1	B – 4
1HX–12168–M1	B – 4
1HX–12168–R1	B – 4
1HX–12168–U1	B – 4
1HX–12168–W1	B – 4
1HX–12168–Y1	B – 4
1HX–12168–00	B – 4
1HX–12168–20	B – 4

CODIGO NO.	REF. NO.
1HX–12168–40	B – 4
1HX–12168–60	B – 4
1HX–12168–80	B – 4
1HX–12169–E0	B – 5
1HX–12169–G0	B – 5
1HX–12169–J0	B – 5
1HX–12169–L0	B – 5
1HX–12169–N0	B – 5
1HX–12169–T0	B – 5
1HX–12169–11	B – 5
1HX–12169–31	B – 5
1HX–12169–50	B – 5
1HX–12169–70	B – 5
1HX–12169–90	B – 5
5JJ–12171–00	B – 6
4XV–12176–00	B – 6
5PW–12181–00	B – 6
5PW–12210–00	B – 6
4FM–12213–00	B – 6
5BE–12241–00	B – 6
4XV–12251–00	B – 6
5PW–12252–00	B – 6
5PW–12405–00	B – 9
4FM–12410–00	B – 9
5PW–12413–00	B – 9
5PW–12417–00	B – 9
4XV–12421–00	B – 7
4XV–12422–00	B – 7
5PW–1243A–00	B – 9
5PW–1243E–00	B – 10
5PW–1243F–00	B – 10
11H–12438–10	B – 7
4XV–12439–00	B – 7
5PW–1244G–00	B – 10
4XV–12450–00	B – 7
5PW–12461–00	B – 9
22W–12462–00	B – 9
5JJ–12469–00	B – 8
5PW–12481–00	B – 7
5PW–12482–00	B – 8
5PW–12483–00	B – 8
5PW–12484–00	B – 9
4XV–12485–00	B – 7
5Y9–12491–00	F – 12
	F – 14
1AA–12535–00	B – 9
5PW–12551–00	B – 9
5PW–12552–00	B – 10

CODIGO NO.	REF. NO.
5JJ–12576–00	B – 8
5PW–12577–00	B – 9
5PW–12579–00	B – 9
5PW–12588–00	B – 10
5PW–12589–00	B – 10
5PW–12822–00	B – 12
5JW–12881–00	B – 14
5JJ–1316E–00	B – 11
5PW–13161–00	B – 12
4XV–13310–00	B – 7
5PW–13318–00	B – 12
5PW–13327–00	B – 11
4XV–13336–00	B – 7
5PW–13354–01	C – 10
4XV–13355–00	B – 7
4XV–13411–00	B – 11
5PW–13412–00	B – 11
5LV–13414–00	B – 12
4XV–13416–00	B – 12
5PW–13417–00	B – 12
5GH–13440–00	B – 12
5PW–13470–00	B – 12
5PW–13473–00	B – 12
5PW–13475–00	B – 12
5PW–13490–00	B – 12
5PW–13597–00	B – 13
5PW–13598–00	B – 13
5PW–13750–00	B – 14
5PW–13761–00	B – 14
5FL–13766–00	B – 14
4XV–13898–00	B – 12
5PW–13906–00	B – 14
5PW–13907–00	D – 13
5PW–13971–00	B – 15
5PW–13972–00	B – 15
5PW–1410F–00	B – 14
5PW–14103–00	B – 14
5JW–14104–00	B – 15
5PW–14112–00	B – 15
5JW–14118–00	B – 14
4KM–14137–00	B – 15
5PW–14137–00	B – 15
3H1–14147–00	B – 15
5FL–14147–00	B – 14
5JW–14147–00	B – 15
4KM–14216–00	B – 15
8CC–14216–10	B – 14
5FL–14348–00	B – 14

CODIGO NO.	REF. NO.
5FL–14348–10	B – 14
5PW–14348–00	B – 14
5PW–14349–00	B – 14
5PW–14396–00	B – 14
5PW–14401–00	B – 13
5JJ–14414–00	B – 13
5PW–14437–00	B – 13
5PW–14451–00	B – 13
4XV–14452–00	B – 13
5PW–14453–00	B – 13
5JW–14589–00	B – 14
5PW–14602–00	C – 3
5PW–14610–00	C – 3
4FM–14613–00	C – 4
5PW–14623–00	C – 3
5PW–14638–01	C – 3
5PW–14643–00	C – 3
5PW–14683–00	C – 3
5PW–14684–00	C – 3
5PW–1469V–00	C – 3
5PW–14710–00	C – 4
4KM–14714–01	C – 2
4XV–14714–00	C – 4
5JJ–14715–00	C – 4
5PW–14777–00	C – 3
5PW–14803–00	C – 2
5PW–14811–01	C – 3
5PW–14821–00	C – 3
5PW–14826–00	C – 4
5PW–14836–00	C – 3
5PW–14858–00	C – 3
5PW–14865–00	C – 3
5PW–14867–00	C – 3
5PW–14868–00	C – 2
5JJ–14872–00	C – 2
5PW–14873–00	C – 2
5JJ–14874–00	C – 2
5PW–14881–00	C – 2
5JJ–14882–00	C – 2
5JJ–14883–00	C – 2
5JJ–14886–00	C – 2
5PW–14889–00	C – 3
4KM–14933–00	B – 14
5DM–14936–00	B – 14
5PW–15100–00	C – 5
4XV–15113–00	C – 7
5JJ–15163–00	C – 11
5PW–15361–00	C – 5

CODIGO NO.	REF. NO.
3F9–15362–00	C – 6
1UF–15379–00	D – 3
5PW–15411–00	C – 6
5PW–15416–00	C – 6
5PW–15418–00	C – 6
5PW–15421–01	C – 6
5PW–15425–00	C – 6
4XV–15441–00	C – 7
5PW–15451–00	C – 6
5JJ–15456–00	C – 6
5PW–15461–00	C – 6
5JJ–15463–00	C – 6
5PW–15515–00	C – 8
5JJ–15517–00	C – 8
4XV–15521–00	C – 8
4XV–15570–00	C – 8
5PW–16150–00	C – 9
26H–16154–00	C – 9
4XV–16154–00	C – 10
341–16321–13	C – 9
2H7–16325–00	C – 9
4XV–16331–00	C – 9
36Y–16334–00	C – 9
36Y–16335–00	C – 9
4XV–16340–10	C – 9
132–16346–00	C – 14
4XV–16351–00	C – 9
1TX–16352–00	C – 9
4XV–16356–01	C – 9
4XV–16370–00	C – 9
4XV–16382–00	C – 9
36Y–16383–00	C – 9
4XV–16384–00	C – 9
2H7–16385–00	C – 9
5JJ–17121–01	C – 11
5JJ–17131–00	C – 11
5JJ–17151–00	C – 11
5JJ–17158–00	C – 11
5JJ–17161–00	C – 11
5JJ–17211–00	C – 12
5JJ–17221–00	C – 11
5JJ–17231–00	C – 12
5JJ–17241–00	C – 11
5JJ–17251–10	C – 12
5PW–17261–00	C – 11
5JJ–17402–00	C – 11
5JJ–17411–01	C – 11
4XV–17460–00	C – 12

INDICE NUMERICO

CODIGO NO.	REF. NO.
5PW–18101–00	C – 14
5PW–18110–00	C – 14
5PW–18112–00	C – 14
5EB–18113–00	C – 14
5PW–18115–00	C – 14
5LV–18116–00	C – 14
4XV–18127–00	C – 14
5JJ–18140–00	C – 14
4XV–18154–00	C – 14
4XV–18511–00	C – 13
5JJ–18512–00	C – 13
5PW–18513–00	C – 13
4XV–18531–00	C – 13
4XV–18536–00	C – 13
5PW–18540–00	C – 13
136–18542–00	C – 13
5PW–21110–00	C – 15
5PW–2116J–00	D – 2
5PW–2117F–00	C – 15
5PW–2117K–00	D – 14
5PW–2117M–00	C – 15
5PW–2117N–00	C – 15
5PW–21190–00	C – 15
5PX–21268–00	D – 3
5PW–2134K–00	F – 15
5PW–2137Y–00	C – 15
4XV–21376–00	D – 3
5JW–2139X–00	C – 7
5EB–2144G–00	E – 10
5PW–21446–00	D – 2
5PW–21486–00	C – 15
5PW–21488–00	C – 15
4X7–2149Y–00	B – 13
5EB–21495–00	C – 15
5PW–21511–00–P0	D – 3
5PW–21511–00–P1	D – 3
5PW–21511–00–P2	D – 3
5PW–2161G–00	D – 4
5PW–21611–00–P0	D – 3
5PW–21611–00–P1	D – 3
5PW–21611–00–P2	D – 3
5PW–21629–00	F – 10
5PW–21650–00–P0	D – 7
5PW–21650–00–P1	D – 7
5PW–21650–00–P2	D – 7
5PW–21669–00	D – 3
5PW–21711–00–P0	D – 5
5PW–21711–00–P1	D – 5

CODIGO NO.	REF. NO.
5PW–21711–00–P2	D – 5
5PW–21732–00	D – 3
1JK–21735–00	F – 4
5PW–21737–00	D – 5
5PW–2174X–00	D – 5
2TK–21757–00	F – 4
5PW–2177L–00	E – 14
	F – 2
	F – 3
	F – 4
4J2–21778–00	D – 2
26H–21828–00	D – 5
5PW–21852–00	C – 15
5PW–21871–00	D – 5
5EB–21875–00	D – 5
5PW–22110–00	D – 6
5PW–22125–00	D – 6
5JJ–22128–00	D – 6
5JJ–2214F–00	D – 7
4FN–22141–00	D – 6
5PW–22151–00	D – 7
4XV–2217A–00	D – 6
5PW–2217M–00	D – 6
4XV–22184–00	D – 6
5PW–22210–00	D – 8
5PW–22311–00	D – 7
5PW–22873–00	D – 7
5PW–22874–00	D – 7
5PW–22875–00	D – 7
5PW–22876–00	D – 7
5PW–23102–00	D – 10
5PW–23102–10	D – 10
5PW–23103–00	D – 10
5PW–23103–10	D – 10
5PW–23110–00	D – 10
5PW–23111–00	D – 10
	D – 11
5PW–23118–00	D – 10
	D – 11
5PW–23120–00	D – 11
5PW–23125–00	D – 10
	D – 11
5PW–23136–00	D – 10
5PW–23136–10	D – 10
5PW–23141–00	D – 10
	D – 11
4XV–23142–00	D – 10
	D – 11

CODIGO NO.	REF. NO.
4PU–23144–00	D – 10
	D – 11
5PW–23145–00	D – 10
5PW–23146–00	D – 10
3XJ–23147–L0	D – 10
	D – 11
4V4–23153–L0	D – 10
2K8–23158–L0	D – 10
	D – 11
5PW–23170–00	D – 10
	D – 11
3LC–23181–00	D – 10
	D – 11
5PW–23340–00	D – 11
3LC–23357–00	D – 10
	D – 11
4XV–2341B–00	D – 9
4XV–23415–01	D – 9
4XV–23418–00	D – 9
4XV–23434–00	E – 6
5PW–23435–00	D – 9
3FV–23462–00	D – 9
2H9–23469–00	E – 6
5PW–23818–00	D – 9
5PW–2411J–00	D – 13
5PW–24129–00	D – 13
5PW–2413B–00	D – 12
5PW–2413Y–00	D – 12
5PW–24139–00	D – 13
5PW–2414H–00	D – 13
3YF–2414J–10	D – 2
5PW–2414J–00	D – 13
5PW–24141–00	D – 13
2GH–24181–00	D – 12
4FM–24181–00	C – 4
4YR–24181–00	D – 12
2GH–24183–00	D – 12
4XV–24183–00	D – 12
5JJ–24186–00	D – 12
5JJ–24187–00	D – 12
5PW–24191–00	D – 12
5PW–24192–00	D – 13
5PW–24240–00	D – 12
5PW–24312–00	D – 13
3PA–24356–00	E – 7
68V–24376–00	B – 14
5PW–24411–00	B – 14
5JW–24486–00	D – 13

CODIGO NO.	REF. NO.
5PW–24491–00	D – 13
3LN–24515–00	B – 15
5JJ–24602–00	D – 12
5PW–2470F–00	D – 14
5PW–24710–00	D – 14
5JJ–2475X–01	D – 14
5PW–24750–00	D – 14
5PW–24751–00	D – 14
5JJ–2478E–00	D – 14
4BP–24780–00	D – 14
5JJ–24792–01	D – 14
4XV–25117–00	D – 15
4XV–25118–00	D – 15
5PW–25168–00–33	D – 15
5PW–25181–00	D – 15
4XV–25186–00	D – 15
5PW–25188–00	D – 15
5PW–25317–00	E – 3
5PW–25338–01–33	E – 3
5PW–25364–00	E – 3
5PW–25366–00	E – 3
5JJ–25367–00	E – 3
5PW–25367–00	E – 3
4XV–25376–00	E – 3
5PW–25377–00	E – 3
4XV–25381–00	E – 4
4XV–25383–00	E – 3
4XV–25388–00	E – 4
4XV–25389–00	E – 4
5MT–25398–00	D – 15
	E – 3
5MT–25398–10	D – 15
	E – 3
5MT–25398–20	D – 15
	E – 3
4XV–25443–21	E – 3
5PW–2580T–00	E – 2
5PW–2580U–00	E – 2
5PW–2580W–00	E – 5
5JJ–2581T–10	E – 2
3LN–2582A–00	E – 12
5PW–2582F–01	E – 7
5EB–2582W–00	E – 5
5EB–25828–00	E – 5
5GM–25828–00	E – 5
3TU–2583V–01	E – 12
3LN–2585F–00	E – 12
3LN–2585H–00	E – 12

CODIGO NO.	REF. NO.
3GM–25852–50	E – 7
3XP–25852–50	E – 12
2VN–25854–00	E – 12
3FV–25854–00	E – 7
2J2–25855–50	E – 7
2VN–25855–00	E – 12
2VN–25866–00	E – 7
56A–25867–00	E – 7
5PW–25872–00	E – 7
5PW–25874–00	E – 12
5PW–25875–00	D – 3
5PW–25876–00	D – 3
5EB–25886–01	E – 13
5PW–25886–00	E – 13
5PW–25887–00	E – 7
3FV–2589A–00	E – 7
3FV–2589F–00	E – 7
3FV–2589G–00	E – 7
3GM–2589H–00	E – 7
3FV–25894–00	E – 7
5JJ–25894–00	E – 12
5PW–25895–00	E – 12
5PW–25914–00	E – 5
4SV–25919–00	E – 2
4TT–25919–00	E – 5
5PW–25921–00	E – 5
4SV–25924–00	E – 2
3GM–25925–00	E – 2
4TT–25937–00	E – 5
5PW–26121–00	E – 6
5PW–26122–00	E – 6
4YR–26240–01	E – 6
4YR–26241–01	E – 6
5PW–26246–00	E – 6
5PW–26280–00	E – 14
3XW–26281–01	E – 6
3XW–26282–01	E – 6
5PW–26290–00	E – 15
4SV–26298–00	E – 15
5PW–26302–00	E – 6
5PW–26335–00	E – 6
5PW–27211–00	E – 12
4XV–27222–01	E – 12
5PW–27311–00	E – 9
5JJ–27315–00	E – 9
5JJ–27321–00	E – 9
4NX–27351–00	E – 9
5PW–27352–00	E – 9

CODIGO NO.	REF. NO.
5JJ–27410–01	E – 9
1HX–27415–00	E – 14
5JJ–27420–01	E – 10
36Y–27424–00	E – 11
4XV–27424–00	D – 2
5JJ–27430–00	E – 10
5JJ–27437–00	E – 10
5PW–27440–00	E – 10
5PW–27442–00	E – 9
5PW–27443–00	E – 9
5JJ–27445–00	E – 9
5JJ–27446–00	E – 10
5JJ–27813–00	E – 12
5PW–28100–00	D – 4
5PW–283A0–00	E – 14
5PW–28307–00	F – 2
5PW–28315–00	E – 14
5PW–28315–10	E – 14
5PW–28315–20	E – 14
5PW–2832M–00	F – 3
5PW–2832N–00	F – 3
5PW–2832P–10	E – 14
5PW–28328–A0	F – 2
5PW–28328–00	F – 2
5PW–28328–10	F – 2
5PW–28328–20	F – 2
4XV–28336–00	E – 14
5PW–28338–A0	F – 3
5PW–28338–00	F – 2
5PW–28338–10	F – 2
5PW–28338–20	F – 2
1AE–2834E–00	D – 3
5PW–2834E–00	F – 4
5JJ–2834W–00	E – 14
5PW–28356–00	E – 14
5PW–2836A–00	F – 3
5PW–2836E–00	F – 3
5PW–2836F–00	F – 4
5PW–2836K–00	F – 4
5PW–2836L–00	F – 4
1AE–2837J–00	D – 12
1TX–28371–00	E – 14
	F – 2
	F – 4
4XV–28371–00	B – 13
5DM–28371–00	E – 14
5PW–28371–00	F – 2
5PW–28372–00	D – 7

INDICE NUMERICO

CODIGO NO.	REF. NO.
5PW–28386–00	F – 4
5PW–28391–00	F – 2
5PW–28391–10	F – 2
5PW–28391–20	F – 2
5PW–28392–00	F – 3
5PW–28392–10	F – 3
5PW–28392–20	F – 3
5PW–28393–00	F – 2
5PW–28394–00	F – 3
5PW–2848L–00	F – 3
5PW–2848M–00	F – 4
5PW–2848N–00	F – 4
5PW–81410–00	F – 5
5PW–81450–00	F – 5
5PW–81670–00	F – 12
5PW–81673–00	F – 12
5PW–81801–00	F – 6
5JJ–8181L–00	F – 6
5JJ–81828–00	F – 6
5PW–8183G–00	F – 6
5JJ–81846–00	F – 6
5PW–81890–00	F – 6
5JW–81940–00	F – 14
5JJ–81950–10	F – 13
5JJ–81950–20	F – 13
	F – 15
5PW–81950–00	F – 15
5JW–81960–00	F – 15
4TX–82100–02	F – 14
5PW–82115–00	F – 14
5PW–82116–00	F – 14
5PW–8212B–00	D – 3
5JJ–82131–00	F – 14
5JJ–82151–10	F – 14
5JJ–82151–20	F – 14
5JJ–82151–90	F – 14
5PW–82309–00	F – 12
5PW–82310–00	F – 12
5JW–82380–00	B – 14
	F – 13
5PW–82386–00	B – 14
5JJ–82388–00	F – 15
5PW–82501–00	F – 14
5PW–82530–00	F – 14
3GB–82540–01	F – 12
5JJ–82541–00	F – 12
5PX–82566–50	F – 15
5PS–82576–01	F – 15

CODIGO NO.	REF. NO.
5PW–82590–00	F – 14
4XV–82910–13	F – 11
4XV–82917–01	F – 11
5PW–83310–01	F – 7
1KH–83311–00	F – 7
5PW–83318–00	F – 7
5PW–83320–01	F – 7
5PW–8333A–00	F – 7
5PW–83330–00	F – 7
5PW–8334A–00	F – 7
5PW–83340–00	F – 7
4GY–83350–00	F – 15
3TB–83371–01	F – 15
5PW–83500–00	F – 8
4XV–83513–00	E – 14
	F – 8
5PW–8353E–00	F – 8
5PW–83572–00	F – 8
4XV–83755–01	F – 12
4XV–83912–11	F – 11
5JJ–83913–00	F – 11
5PW–83922–00	E – 7
4XV–83945–00	F – 11
5LV–83951–00	F – 11
5RT–83963–00	F – 11
5PW–83972–00	F – 11
4HM–83980–00	E – 7
4KB–84117–00	F – 10
5PW–84310–00	F – 9
5PW–84312–00	F – 9
8V0–84314–10	F – 9
4SV–84347–00	F – 9
5PW–84359–00	F – 9
5PW–84385–00	F – 9
5PW–84386–00	F – 9
4SV–84397–00	F – 9
2AL–84553–00	F – 14
5PW–84710–00	F – 10
5PW–84717–00	F – 10
5PW–84726–00	F – 10
4HC–84744–00	F – 10
5PW–84745–00	F – 10
3Y6–85130–02	F – 10
5PW–85720–00	F – 12
5FL–85790–00	F – 13
8CC–85790–01	F – 12
5PW–85820–00	F – 12
5PW–85829–00	F – 12

CODIGO NO.	REF. NO.
5PW–85885–00	B – 14
5PW–85896–00	F – 13
5PW–8591A–00	F – 12
9Y582–05113	E – 3
90101–08662	E – 9
90101–08766	E – 4
90105–06026	B – 2
90105–06154	B – 7
90105–06718	E – 13
90105–07342	B – 6
90105–08015	C – 5
90105–10017	D – 6
90105–10018	D – 6
90105–10020	D – 8
90105–10021	D – 6
90105–10022	E – 11
90105–10290	F – 12
90105–105A6	F – 5
90105–105A7	E – 2
90105–14002	D – 15
90109–06013	E – 12
90109–06014	C – 6
	C – 7
90109–06015	C – 6
	C – 7
90109–063F1	D – 3
90109–064G6	E – 2
	E – 5
90109–065G3	C – 5
90109–066F0	B – 2
90109–080G5	F – 14
90109–083E0	E – 9
	E – 10
90109–085G6	E – 9
	E – 11
90109–10002	E – 9
90109–104G5	C – 15
90110–05014	D – 13
90110–05112	D – 12
90110–06018	B – 8
	B – 9
	B – 11
	B – 12
	C – 5
	F – 5
	F – 12
90110–06019	F – 13
90110–06025	C – 3

CODIGO NO.	REF. NO.
90110–06025	C – 4
90110–06026	B – 7
90110–06047	B – 11
90110–06063	B – 7
90110–06065	C – 8
90110–06136	C – 7
90110–06224	C – 6
90110–06225	B – 12
90110–06226	C – 13
	E – 9
90110–06258	D – 14
90110–10005	C – 15
90111–06019	C – 14
90111–06030	D – 3
90116–10485	E – 3
90116–10619	C – 5
90119–06044	D – 12
90119–06052	F – 3
90119–06096	D – 7
90119–06114	D – 9
90119–06115	C – 3
90119–06118	D – 3
90119–06187	C – 4
90119–06190	D – 12
90119–09002	C – 5
90149–06013	F – 5
90149–06020	B – 2
90149–06233	E – 9
	E – 10
90149–06286	C – 11
90149–06302	D – 3
	D – 7
	F – 3
	F – 4
90149–06308	D – 14
90149–08296	E – 9
	E – 10
90149–10004	C – 15
90150–05024	E – 14
90150–05039	D – 5
90153–06029	B – 8
90154–05013	F – 4
90154–05074	D – 13
90159–06056	E – 12
90159–06150	E – 10
90164–05014	E – 14
	F – 8
90170–06228	C – 14

CODIGO NO.	REF. NO.
90170–28419	D – 9
90176–06055	E – 15
90176–10075	B – 2
90179–05523	E – 14
90179–08327	B – 3
90179–08410	C – 4
90179–10006	B – 2
90179–10414	B – 2
90179–10696	C – 15
90179–20003	C – 9
90179–22003	C – 12
90179–30691	D – 9
90183–04039	F – 15
90183–05074	F – 2
	F – 3
90183–06053	E – 12
	F – 15
90185–10009	E – 3
90185–18167	D – 6
90185–24165	E – 4
90201–047A2	F – 15
90201–050T4	C – 3
90201–05033	F – 10
90201–057H5	F – 15
90201–05725	F – 10
90201–06042	E – 9
	E – 10
90201–06063	D – 2
90201–06071	B – 9
90201–06431	C – 3
90201–08089	C – 8
90201–081R9	E – 9
90201–08326	D – 2
90201–08612	C – 4
90201–10M76	C – 3
90201–10013	B – 2
90201–10020	C – 15
90201–10021	E – 3
90201–101J1	E – 9
90201–10118	E – 8
	E – 12
90201–103U7	F – 5
90201–10614	C – 10
90201–10669	E – 11
90201–107K6	F – 12
90201–120K4	C – 14
90201–12541	B – 7
90201–12790	F – 13

CODIGO NO.	REF. NO.
90201–13008	E – 9
	E – 10
90201–14014	C – 3
90201–146F9	E – 9
90201–18013	D – 6
90201–224L4	C – 12
90201–257R5	E – 4
90201–281U8	D – 9
90201–43008	C – 10
90202–05123	E – 14
90202–06001	F – 15
90202–30235	D – 9
90209–25342	C – 11
90209–25349	C – 11
90209–25350	C – 11
90209–30343	C – 12
90209–30344	C – 11
90209–30345	C – 11
90215–25001	C – 9
90215–30233	C – 12
90243–08029	E – 9
	E – 10
90269–06081	F – 4
90269–07076	C – 15
	D – 5
90269–07077	D – 3
	D – 5
	F – 4
90269–08002	C – 15
	D – 7
90338–08226	F – 12
90338–15004	C – 15
90338–16262	C – 5
90338–20263	C – 5
90340–14132	B – 12
90340–27001	B – 2
90340–32080	C – 6
90387–06M60	D – 2
90387–0600V	D – 7
90387–06006	D – 12
90387–06007	D – 12
90387–06023	E – 10
90387–06024	E – 15
90387–0603J	D – 7
90387–062M9	D – 5
90387–06372	D – 7
90387–065G0	D – 4
90387–065J6	B – 13

INDICE NUMERICO

CODIGO NO.	REF. NO.
90387–065J6	D – 3
	F – 2
	F – 3
	F – 4
90387–06697	E – 10
90387–07391	B – 9
	C – 2
90387–08005	D – 2
90387–08057	D – 3
90387–10001	E – 11
90387–1012A	D – 6
90387–1012B	D – 6
90387–1013U	D – 6
90387–12012	C – 15
90387–1211D	C – 14
90387–2511A	C – 11
90387–2810U	C – 11
90387–2811B	C – 11
90387–3310V	C – 11
90387–3311C	C – 11
90401–10172	E – 8
	E – 12
90401–20145	B – 12
90413–07023	B – 10
90430–06014	B – 2
	B – 7
	C – 8
90430–08143	C – 6
90430–09002	B – 15
90430–10148	F – 12
90430–12202	F – 13
90445–081H0	D – 5
90445–094K7	B – 10
90445–102G7	D – 12
90445–11M52	B – 13
90445–11013	B – 13
90445–161K7	C – 5
90445–19002	E – 9
90446–17346	E – 12
90450–19001	B – 10
90450–22017	B – 10
90450–28014	B – 9
90450–32015	B – 9
90450–38040	B – 8
	B – 9
90450–53002	B – 13
90450–63001	B – 13
90461–10002	F – 15

CODIGO NO.	REF. NO.
90461–10003	C – 6
90462–08225	F – 12
90462–10013	C – 4
90464–06004	F – 15
90464–07004	F – 14
90464–07259	D – 3
90464–09001	D – 2
90464–10075	D – 5
90464–12036	F – 14
90464–13073	F – 14
	F – 15
90464–13077	C – 2
	F – 15
90464–13133	F – 14
90464–15157	F – 14
90464–16005	B – 15
90464–16006	F – 14
90464–16007	B – 15
90464–16039	F – 14
90464–17001	F – 15
90464–37257	F – 14
90465–04020	D – 3
90465–08013	F – 12
90465–08028	F – 12
90465–08191	F – 12
90465–14011	F – 5
90467–08003	B – 10
	D – 5
90467–09006	D – 12
	D – 13
90467–10041	B – 13
90467–11019	D – 5
90467–11090	B – 9
	B – 10
90467–120A1	B – 15
90467–12003	B – 15
90467–12191	E – 12
90467–14015	C – 5
90467–14057	E – 12
90467–15001	C – 2
90467–15054	C – 2
90467–16181	C – 2
90467–17089	C – 2
90468–08104	C – 5
90468–12069	B – 3
90480–12005	D – 7
90480–12072	D – 3
90480–12314	B – 13

CODIGO NO.	REF. NO.
90480–12596	F – 2
	F – 3
	F – 4
90480–12607	E – 10
90480–14604	D – 2
90480–15316	C – 2
90480–15363	B – 9
90501–064L1	C – 13
90501–12743	E – 10
90506–10003	C – 4
90506–16005	C – 14
90506–18003	E – 9
90506–20377	E – 12
90508–164B2	C – 9
90508–18134	E – 9
90508–18135	E – 10
90508–32682	C – 14
91314–06010	C – 4
91314–06016	D – 12
91314–06020	C – 6
91314–06025	C – 6
	E – 6
91314–06035	C – 6
	E – 10
91314–06040	C – 6
91314–06050	C – 6
91314–08030	D – 9
	D – 11
91314–08040	D – 10
	D – 11
91314–10040	C – 15
91314–10050	C – 15
91316–06020	E – 7
91317–04025	F – 15
91317–05010	D – 12
91317–05035	E – 6
91317–06012	B – 8
	B – 12
	C – 2
	E – 7
91317–06014	F – 12
91317–06016	B – 8
91317–06025	B – 7
	B – 12
	E – 6
91317–06035	B – 7
91317–06040	B – 7
91317–06060	B – 2

CODIGO NO.	REF. NO.
91380–04006	C – 3
91401–16012	E – 12
91701–06018	E – 12
91808–16023	B – 2
91808–30031	B – 7
92014–08016	C – 6
92017–05030	F – 15
92017–06012	D – 5
92017–06014	C – 8
92017–06020	D – 3
92902–04100	E – 7
92902–04600	E – 7
92906–05100	B – 14
92906–05600	B – 14
92907–06100	B – 9
92907–06200	E – 12
92907–06600	B – 9
92907–08600	C – 9
92990–04600	C – 3
92990–06600	C – 4
93101–12004	C – 14
93102–12372	B – 7
93102–15212	C – 9
93102–45465	C – 12
93106–28043	D – 15
93106–40013	E – 3
93109–17071	D – 6
93210–06667	B – 7
	B – 11
93210–09165	B – 11
93210–12790	C – 5
93210–14003	B – 12
93210–15566	B – 12
93210–15620	E – 7
93210–16314	C – 5
93210–18417	B – 8
93210–235A1	B – 8
93210–23787	B – 9
93210–25711	F – 6
93210–27194	C – 6
93210–27370	B – 8
93210–32172	C – 6
93210–357A2	B – 7
93210–47675	B – 8
93210–55669	F – 6
93306–00106	B – 7
93306–00304	C – 9
93306–00420	D – 15

CODIGO NO.	REF. NO.
93306–20531	E – 3
93306–20705	C – 11
93306–27208	C – 11
93306–37209	C – 12
93306–37807	C – 11
93310–228S5	C – 9
93310–338S6	C – 8
93315–11206	C – 14
93315–31502	C – 10
93315–31758	D – 6
93315–42523	D – 6
93315–42536	D – 6
93317–11020	C – 9
93317–43580	E – 3
93399–99932	D – 9
93410–06053	C – 3
93410–08072	C – 8
93420–61M07	E – 3
93440–07149	B – 2
93440–10153	B – 2
93440–28062	C – 11
93440–32063	C – 11
93440–72049	C – 12
93501–04011	E – 10
93603–12007	B – 7
93603–17070	B – 7
93604–10011	B – 7
93604–29151	F – 12
93606–07M17	C – 3
93607–44190	B – 6
93608–21002	C – 6
93900–00030	D – 15
	E – 3
94112–17054	D – 15
94119–17019	E – 3
94580–25078	B – 11
94591–49130	B – 6
94682–05031	E – 3
94701–00407	B – 2
94701–00408	B – 2
95024–06012	B – 2
95024–08035	C – 15
95027–06008	F – 14
95027–06020	B – 8
	E – 7
	F – 11
95027–06025	B – 6
	B – 9

CODIGO NO.	REF. NO.
95027–06025	D – 2
	F – 6
95304–06700	C – 14
95304–08700	E – 12
95307–05700	F – 6
95307–08600	E – 4
95604–06200	E – 10
95606–06100	E – 7
95607–05100	F – 10
95607–05200	F – 15
95607–06100	F – 11
95607–06200	D – 12
95607–08200	E – 14
95607–10200	D – 6
	D – 8
	E – 9
95617–08625	B – 2
95707–06500	D – 2
	D – 3
	D – 14
	F – 15
95807–06012	F – 4
	F – 15
95807–06014	D – 2
95814–06050	C – 5
95817–06012	F – 14
95817–06020	B – 13
95817–06025	C – 9
95817–06045	C – 5
95817–06055	C – 5
95817–06060	C – 5
95817–06065	C – 5
95817–06070	C – 5
95817–06110	D – 12
95817–08025	C – 15
95817–08030	C – 4
95817–08040	C – 4
95817–08050	C – 5
95824–06020	C – 14
95827–06020	C – 2
95827–06025	B – 9
95827–06030	F – 15
97080–06008	C – 3
97307–06012	B – 9
97706–04012	F – 7
	F – 10
97707–30016	F – 8
97707–40012	D – 14

INDICE NUMERICO

CODIGO NO.	REF. NO.	CODIGO NO.	REF. NO.	CODIGO NO.	REF. NO.	CODIGO NO.	REF. NO.	CODIGO NO.	REF. NO.	CODIGO NO.	REF. NO.
97707–50016	F – 4										
	F – 9										
	F – 10										
97707–50020	F – 13										
97707–50514	F – 12										
97707–60020	F – 12										
98502–04010	B – 14										
98502–04012	E – 7										
98506–05016	B – 14										
98507–04010	F – 11										
98507–05025	B – 13										
	F – 11										
98507–05045	B – 13										
	F – 11										
98707–03016	F – 11										
98907–05008	D – 13										
99001–07600	C – 9										
99009–10400	C – 10										
99241–00080	D – 5										
99241–00320	F – 3										
	F – 4										
99246–00080	D – 5										
99246–00320	F – 3										
	F – 4										
99247–00080	D – 5										
99247–00320	F – 3										
	F – 4										
99530–08012	B – 12										
	C – 6										
	C – 7										
99530–10014	C – 5										
99530–10114	C – 5										

CONTENIDO

MOTOR

CILINDRO B2
CIGUENAL. PISTON B3
VALVULA B4
ARBOL DE LEV. CADENA B6
BOMBA DE AGUA B7
RADIADOR. MANGUELA B9
BOMBA DE ACEITE B11
FILTRO ACEITE B12
ADMISION B13
ADMISION 2 . . . . . B14
SYSTEMA DE INDUCCION DE AIRE C2
DESCARGA C3
CARTER C5
CUBIERTA DE CARTER 1 . . . . . C6
ARRANQUE C8
EMBRAGUE C9
TRANSMISION C11
LEVA DE CAMBIO. HORQ C13
EJE DE CAMBIO. PEDAL C14

SHASIS

CUADRO C15
GUARDABARRO D3
CUBIERTA LATERAL D5
BRAZO TRASERO D6
SUSPENSION TRASERO D8
DIRECCION D9
HORQUILLA DELANTERA D10
DEPOSITO DE COMBUSTIBLE D12
ASIENTO D14
RUEDA DELANTERA D15
CALIBRE FRENO DELANTERA E2
RUEDA TRASERA E3
CALIBRE FRENO TRASERA E5
MANUBRIO. CABLE E6
CILINDRO MAESTRO DELANTERO E7
SOPORTE. APOYAPIE E9
CILINDRO MAESTRO TRASERO E12
BOVEDA 1 . . . . . E14
BOVEDA 2 . . . . . F2
GENERADOR F5
MOTOR DE ARRANQUE F6
LUZ DE DESTELLADOR F7
MEDIDOR F8
FARO DELANTERO F9
LUZ DE COLA F10
INTERRUPTOR DE MANIJA. PALANCA F11
EQUIPO ELECTRICO 1 . . . . . F12
EQUIPO ELECTRICO 2 . . . . . F14

INDICE

NUMERICAL INDEX M1